PHILIPS
TECHNICAL LIBRARY
PHILIPS

HARLEY CARTER ★ CATHODE RAY OSCILLOSCOPE

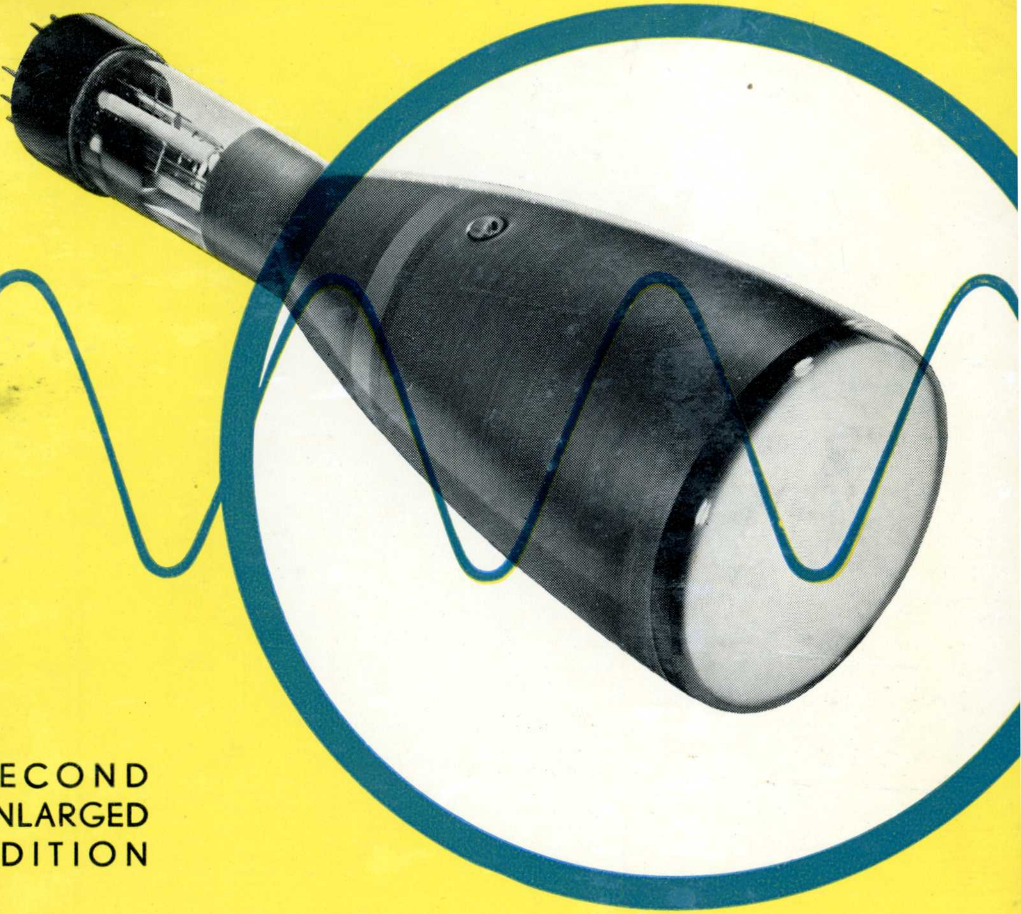

SECOND
ENLARGED
EDITION

AN INTRODUCTION TO THE CATHODE RAY OSCILLOSCOPE

BY

HARLEY CARTER A.M.I.E.E.

POPULAR SERIES

PHILIPS' TECHNICAL LIBRARY

DEJ

AN INTRODUCTION TO THE CATHODE RAY OSCILLOSCOPE

AN INTRODUCTION TO THE

CATHODE RAY OSCILLOSCOPE

BY

HARLEY CARTER A.M.I.E.E.

1960

Second reset and enlarged edition

POPULAR SERIES

PHILIPS TECHNICAL LIBRARY

Publisher's note:
This book is published in English, French, German and Spanish
U.D.C. Nr. 621.317.755
It contains 132 pages, 99 illustrations

Printed in the Netherlands

First edition 1957
Second reset and enlarged edition 1960

PREFACE TO THE SECOND EDITION

In preparing this, the second English edition, additions have been made to the text in order to include further information or explanations suggested by readers.

Chapter VIII — "Some Complete Oscilloscope Circuits" — has been largely re-written. Some of the circuits described in the first edition have been replaced by new or revised designs which incorporate many interesting and novel features and employ the latest types of tubes.

The whole of the text has been re-set in a larger and more legible type, and this has provided an opportunity of correcting a number of typographical errors which unfortunately existed in the first edition.

Harley Carter

London, September 1959.

PREFACE TO THE FIRST EDITION

Possibly no single piece of measuring equipment currently available is more adaptable or has a wider field of application than the cathode ray oscilloscope.

It was originally developed in a comparatively crude form for laboratory use, but improvements in the design of cathode ray tubes, the development of new and ingenious circuits, and, above all, modern precision methods of tube manufacture, have made possible the production of oscilloscopes of many types. Some of these are designed for specific applications in various branches of scientific research or industrial investigation, but many more are suitable for use in testing, inspection, adjustment and repairing in both electrical and mechanical engineering practice.

These "general purpose" oscilloscopes have frequently to be used by technicians and shop engineers who, while experts in their own branches of industry, may have only a nodding acquaintance with electronics. It is with this class of user particularly in mind that the present book has been written.

There are, however, others who may find this Introduction to the Cathode Ray Oscilloscope of interest — the serious experimenter, the technical apprentice and the student in technical training establishments, to mention only a few. To all these, and to others who seek a simple explanation of the operation of the cathode ray tube and of the principles, construction and application of the cathode ray oscilloscope, I offer these pages.

I have refrained from any attempt at mathematical treatment, and have endeavoured to render the explanations sufficiently simple for those having only a slight knowledge of electronic circuits while at the same time avoiding offence to the more expert reader. The examples of practical applications of the oscilloscope have been selected to cover the more important basic techniques and also a wide variety of interests but, of course, this chapter does not pretend to be exhaustive.

I wish to express my sincere thanks to Mr. J. Jager of Philips, Eindhoven, for his help in collecting much of the material for Chapters 3 and 4, and to the many engineers at Eindhoven from whose published work I have been allowed to quote. I am also greatly indebted to Mullard Limited, London, for permission to use a number of illustrations taken from their library of technical and educational publications and filmstrips.

Harley Carter

London, January 1957.

CONTENTS

CHAPTER I

INTRODUCTION

The great majority of devices for measuring electric currents or voltages make use of one or another of the following phenomena:

1. The heat generated by a current when overcoming resistance.
2. The chemical reactions which occur when a current passes through an electrolyte.
3. The forces acting upon magnets, magnetic materials, or conductors carrying currents, in a magnetic field.
4. The forces set up in an electric field.

Except for a few limited applications, the first two principles are today merely of academic interest. Instruments of the electromagnetic type are, of course, familiar to the practical engineer, typical examples being moving iron and moving coil ammeters and voltmeters. These instruments are essentially current-measuring devices, although by making their resistance high, so that the current passing through them is very small compared with the total current in the circuit, they can be employed for voltage measurement. Electrostatic instruments are purely voltage-operated devices and are represented in engineering practice by the electrostatic voltmeters used for measuring comparatively high voltages.

Conventional instruments of the electromagnetic type are quite satisfactory for very many practical measurements, such as those of direct currents and voltages or the r.m.s. values of alternating currents and voltages, provided the quantities being measured do not change their values very rapidly.

They suffer, however, from the great disadvantage that the moving system has appreciable inertia, as a result of which the instrument cannot follow instantaneously variations in the quantity being measured. Moreover, the instrument absorbs an appreciable amount of power from the circuit under examination.

This will be clear from a brief consideration of the operating principle of such an instrument. The current to be measured, flowing through the instrument, exerts a torque on the moving element which is therefore deflected. This torque, and therefore the deflection of the moving element, is opposed by a controlling torque which may be produced, say, by gravity or by a spring. The moving element comes to rest when the deflecting torque is exactly balanced by the controlling torque, the amount of the deflection then being a measure of the deflecting torque and thus of the current through the instrument. Because of its inertia, the moving element takes an appreciable time to reach its final position, and having done so tends to over-shoot, so that there is a certain amount of oscillation of the pointer before it comes to rest at the true reading.

In order to reduce the amount of this oscillation, some form of damping, such as a dash-pot or an eddy-current damping system is usually incorporated in the instrument. Thus, all instruments of this type are inherently sluggish to the extent that they cannot quickly respond to rapid or sudden fluctuations of voltage or current, and in all such instruments energy must be expended in overcoming the controlling torque, while the damping system, unless critically adjusted, may impose a further load on the circuit.

The need for electrical measuring instruments having a very quick response was felt early in the history of electrical engineering. At first only in the laboratory, but later in industry itself, there arose such problems as the examination of the waveforms of alternating currents and other periodic phenomena, and the investigation of "transients" — sudden pulses, usually of very short duration and occuring either singly or at random intervals.

Early attemps to meet these requirements consisted in the main of improved methods of applying the principle of the moving coil instrument, by keeping the inertia of the moving element extremely low, making its resonant frequency very high, and applying critical damping. The moving coil oscillograph of Blondel (1891) was followed in 1893 by the instrument designed by Duddell (Fig. 1). He used a single loop of fine phosphor-bronze wire as the moving "coil", the deflection being indicated by a beam of light reflected from a tiny morror attached to the loop. This light could be made to fall on, say, a moving photographic film, thus producing a trace or graph of the changes of the voltage applied to the instrument over a period of time.

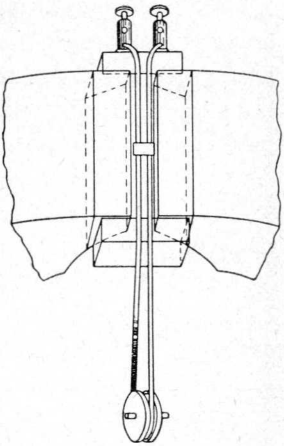

Fig. 1. Duddell oscilloscope (1893)

A still more sensitive instrument, due to Professor Einthoven, was introduced in 1901 (Fig. 2). The moving element in this oscillograph was a single thin fibre of quartz, silvered or gilded to form a conductor, which was mounted in a narrow gap between the poles of a powerful magnet. Movement of the fibre across the gap was observed and measured either directly through a microscope or by a beam of light directed on to the fibre and reflected therefrom on to a screen or scale.

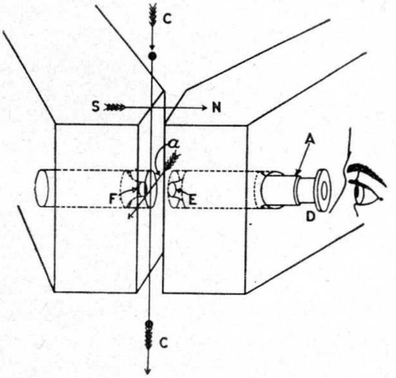

The Einthoven ("string") galvanometer

C-C	Direction of current
S-N	Direction of magnetic field
a	Direction of deflection
A - D - E - F	Optical system

Fig. 2. Einthoven oscilloscope (1901)
With acknowledgements to The Cambridge Instrument Co.

In spite of their careful design and the superb craftsmanship which went into their construction, these oscilloscopes were not capable of following variations occurring at frequencies much greater than 100 cycles per second.

Moreover, they were expensive and delicately-adjusted instruments — hardly the equipment for use in the workshop or factory.

The possibility of a still more efficient oscilloscope was, however, already in existence, in the Cathode Ray Tube. During the latter part of the nineteenth century much work had been done on the investigation of electric discharges in evacuated vessels. It had been ascertained that the discharge from cathode to anode or accelerating electrode consists of a stream of negatively charged particles — to which the name "electron" was given by Johnstone-Stoney in 1890. It was known that this stream of electrons — the so-called "cathode ray" — can be deflected by a magnetic field or by an electric field, and that although the electron stream is itself invisible to the human eye it produces luminescence when it falls upon certain chemical substances, and can also affect a photographic film.

As early as 1897 a form of cathode ray tube was used by Braun as an instrument for measuring electrical quantities. Many improvements have been introduced from time to time, and today the cathode ray oscilloscope is an indispensible tool in the hands of the scientist and the engineer.

The electron beam which forms the moving element of the instrument is, within the limits of present-day methods of measurement, inertialess; and the instrument imposes no load on the circuit under examination.

The cathode ray tube is now employed for the investigation and measurement of both periodic and transient electrical phenomena up to very high frequencies, and also of non-electrical phenomena, such as vibration in solids, which can be converted into variations of current or voltage.

The cathode ray tube has also made possible the art of television as we know it today, and the various systems of navigational aids now known under the collective name of "radar".

The following chapters deal with the principle and construction of the cathode ray tube itself, and with the subsidiary apparatus and circuits which, with the tube, comprise the Cathode Ray Oscilloscope. A number of practical applications of the oscilloscope are briefly described. Technical information and data on commercial cathode ray tubes suitable for use in oscilloscopes are given, and the final chapter contains the designs, circuits and specifications of several complete instruments.

CHAPTER II

THE CATHODE RAY TUBE

The cathode ray oscilloscope is an instrument in which variations of voltage are displayed as a luminous trace on a screen. The complete apparatus comprises a cathode ray tube which forms the measuring and indicating portion of the instrument, and a number of subsidiary units or circuits for providing suitable power supplies, for amplifying or attenuating the voltage to be measured, and for ensuring that the instantaneous values of that voltage are displayed on the screen in succession so that the trace takes the form of a graph in which the voltage is plotted against time. In this chapter the principles upon which the cathode ray tube operates are explained and its construction is described.

Consideration of space precludes discussion of the stages in the development of the cathode ray tube from the crude experimental laboratory models produced in 1897 to the highly efficient mass-produced tubes of today. Neither will any attempt be made to describe all the forms of tube now available, attention being directed only to the type usually employed in oscilloscopes for general laboratory and industrial use.

1. Operating Principle

A cathode ray tube of this type consists essentially of an evacuated glass bulb, of pear-shaped form, with an elongated neck, and flattened at the wider end.

The neck portion contains an assembly of electrodes termed the "gun assembly", and the inner surface of the flattened end is coated with a chemical material to form the screen on which the trace is displayed.

The simplest form of electron gun, shown diagrammatically in Fig. 3, comprises a heated cathode which emits electrons in the same way as the cathode of a thermionic valve, and an accelerating electrode which is maintained at a high positive potential with respect to the cathode, and having a central aperture in line with the cathode. Electrons emitted from the cathode are accelerated in the direction of the accelerating electrode which collects a proportion of the electrons, the remainder passing through the aperture to the screen at a speed proportional the to accelerator potential. When these high-speed electrons strike the screen, light is produced at the point of impact.

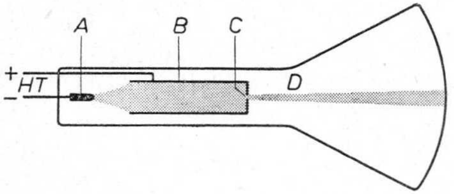

A — Cathode
B — Accelerating electrode
C — Aperture
D — Electron beam

Fig. 3. Cathode ray tube with simple two-electrode gun

Two pairs of metal plates, arranged mutually at right angles, are located in the neck of the tube between the accelerating electrode and the screen. If an electric field is produced between the two plates of one pair, the electron beam is deflected towards the plate which is at a positive potential and away from the plate which is at a negative potential, so that the light spot moves across the screen, say from A to B (See Fig. 4). If, now, another electric field is set up between the two plates of the second pair, the beam is deflected

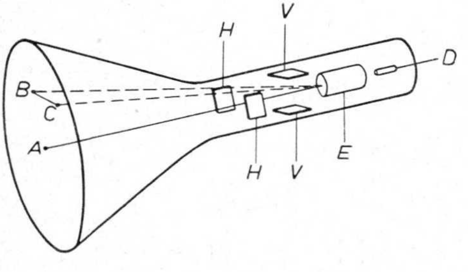

Fig. 4. Method of deflecting the beam
VV—Plates for vertical deflection
HH—Plates for horizontal deflection
A—Position of undeflected spot
B—Position of spot when only vertical deflection is applied
C—Position of spot when both vertical and horizontal deflection are applied

in a direction at right-angles to the direction of the previous deflection, i.e. horizontally and the light spot moves in a corresponding direction e.g. from B to C.

If, therefore, the voltage applied between the two plates which produce vertical deflection is say, an alternating voltage of sinusoidal waveform, the spot will trace a vertical line on the screen. If, now, there is also applied to the other pair of plates a voltage which increases linearly from a negative maximum to a positive maximum in a time equal to that of one or more cyles of the vertical deflecting voltage and then very suddenly falls again to the negative maximum, the resultant travel of the light spot will trace out the sinusoidal waveform as shown in Fig. 5.

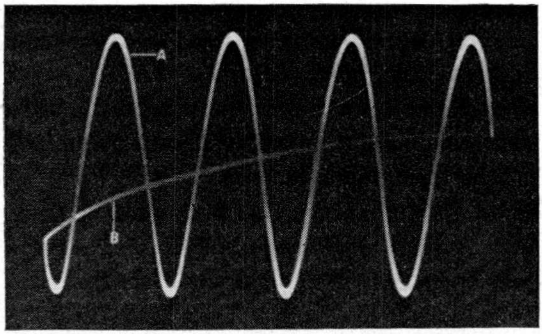

Fig. 5. Oscillogram of a sine wave voltage
A — Sine wave B — Flyback

In the same way the simultaneous variations of any two voltages may be depicted on the screen. Fig. 6, for example, is an oscillogram showing the anode voltage/anode current characteristic of a thermionic valve, reproduced from an actual photograph of the screen of a cathode ray tube.

2. Focusing the Beam

It will be seen from Fig. 3 that a considerable proportion of the electrons emitted from the cathode are collected by the accelerating electrode, and that those electrons ejected from the gun assembly form a slightly divergent beam. The spread of the beam results in a fairly large light spot on the screen. If, therefore, this simple form of gun were used, the trace on the screen would be blurred.

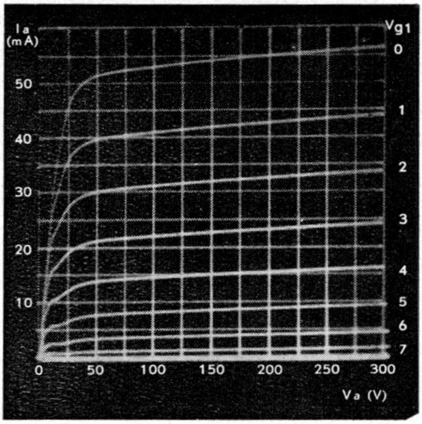

Fig. 6. Oscillogram showing anode voltage/anode current characteristics of a thermionic valve

An improvement, introduced by Wehnelt, consists of a metal cylinder concentric with the cathode and maintained at a suitable negative potential. As is seen in Fig. 7, the Wehnelt cylinder (now usually referred to as the "grid") repels the electrons, thus producing a focusing effect. As a rusult, a smaller proportion of the total electron stream is collected by the accelerator and a greater proportion reaches the screen.

A further degree of focusing is achieved by introducing a further grid, between the Wehnelt cylinder or first grid and the accelerator, and applying to this second grid a positive potential of somewhat lower value than that of the accelerator potential. By correct geometrical design of the electrode system and correct adjustment of the potentials, a non-uniform field is produced which results in a finely focused beam, producing a small spot on the screen and therefore a clean, well-defined trace.

The action of the focusing field on the electron stream is akin to that of a lens on a beam of light, and the arrangement is therefore often termed an electron lens. The subject of electron optics is somewhat complex, but the action of a simple electron lens can be understood by reference to Fig. 8 which shows the positions of the second grid and accelerator, and Fig. 9 which shows the distribution of the electrostatic field produced in their vicinity.

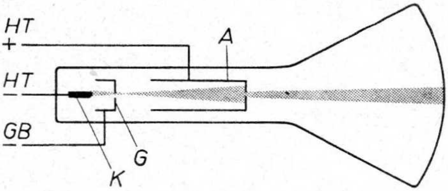

Fig. 7. — Cathode ray tube with three-electrode gun. K — Cathode; G — Wehnelt cylinder (grid); A — Accelerator

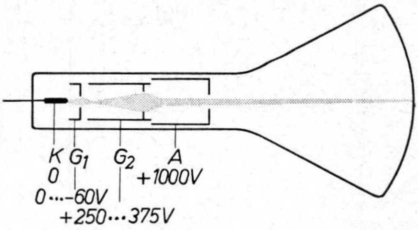

Fig. 8. — Cathode ray tube with four-electrode gun. K — Cathode; G_1 — First grid; G_2 — Second grid; A — Accelerator

In this diagram, the dotted lines represent the equipotential surfaces, the potential difference between any two adjacent equipotential surfaces being the same.

The illustration also indicates a divergent beam of electrons, originating at the point **P**, and entering the electric field produced by the second grid and accelerator. Point **P**, it should be pointed out, corresponds to the focal point produced by the action of the negative electrode or grid shown in Fig. 8. Consider first an electron in the centre of the beam and therefore travelling

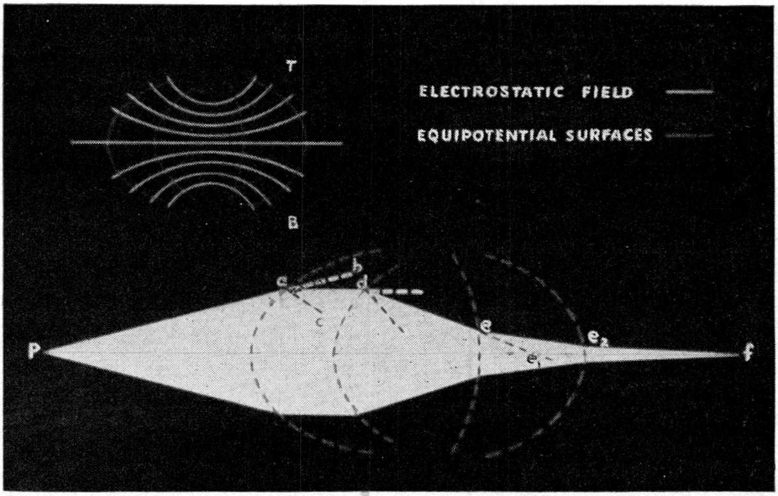

Fig. 9. Focusing effect of the electric field in an electron lens system

axially along the tube. Because its path is at every point perpendicular to the equipotential surfaces, it will not change direction but will continue along its axial path. Now consider an electron at the edge of the divergent beam, and following the path **P-a**. It will reach the point **a** with a certain velocity determined by the potential difference which it has traversed. On reaching **a** the electron is accelerated by the field, this acceleration being in the direction of the maximum potential gradient, that is to say in the direction **a-c** corresponding to the shortest distance between two adjacent equipotential surfaces. But because of its initial velocity in the direction **P-a-b**, it will take a path intermediate between **a-c** and **a-b**, such as **a-d**. Similarly, at each successive equipotential surface the path of the electron is bent further so that eventually the beam becomes convergent instead of divergent.

When, however, the electron reaches **e** where the field strength is decreasing and the equipotential surfaces are therefore concave, it experiences a decelerating force away from the axis, so that instead of continuing along the path **e-e**$_1$ it follows a path such as **e-e**$_2$. If the shape of the electric field has been correctly designed and adjusted — and this is achieved by suitable design of the electrode system and choice of electrode potentials — the beam will come to a focus at **f**, on the luminescent screen of the tube.

3. Deflection of the Beam

The principle of electrostatic deflection has been briefly described in an earlier paragraph, but must now be considered in more detail. Fig. 10 represents in diagrammatic form a simple deflecting system consisting of one pair of plates, and it will be understood that if a difference of potential is applied between the two plates, the electron beam will be deflected in the direction of the more positive plate.

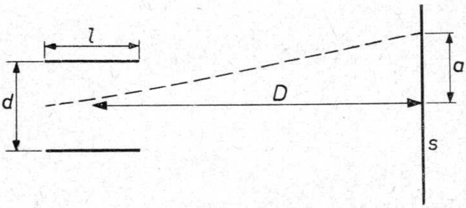

Fig. 10. Simple electrostatic deflecting system. Deflection $a = 0.5 \cdot \frac{D \times l}{d} \cdot \frac{V_d}{V_a}$
where V_d *is the deflecting voltage*
and V_a *is the accelerating voltage*

The amount of the deflection of the luminescent spot on the surface of the screen depends upon several factors, the chief of which are the physical dimensions of the deflecting system and its location with respect to the screen, and the voltages applied to the gun system and to the deflection plates.

For the system illustrated, the distance a over which the luminous spot is deflected from the centre of the screen is given by the formula:

$$a = 0.5 \cdot \frac{D \times l}{d} \cdot \frac{V_d}{V_a} \, ... \, \text{(mm)}$$

where D is the distance between the centre of the deflecting system and the screen in mm
l is the length of the deflecting plates in the axial direction in mm
d is the distance between the deflecting plates in mm
V_a is the pre-deflection accelerator voltage
and V_d is the voltage between the deflecting plates.

Since it is necessary to deflect the beam in two directions — vertically and horizontally — two pairs of deflecting plates are fitted, mutually at right-angles as shown in Fig. 11. The plates further from the screen are arranged for vertical deflection, and are usually denoted D_1, D_1', while the plates nearer the screen, denoted D_2, D_2' are for horizontal deflection. In Britain and in America the plates for vertical deflection are denoted by y, y^1 and the plates for horizontal deflection by x, x^1. For normal applications in which it is desired to examine the variations of a voltage with respect to time, the voltage to be examined is applied between the plates for vertical deflection (D_1, D_1'), while a voltage which changes linearly with respect to time is applied between plates D_2 and D_2'.

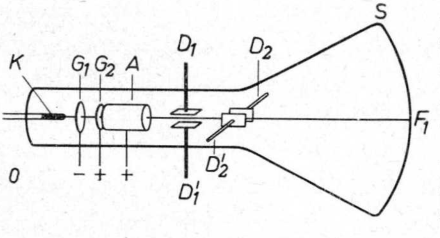

Fig. 11. Complete electrode system of an oscilloscope tube. K — Cathode; G_1 — First grid; G_2 — Second grid; A — Accelerator; D_1, D_1' — Plates for vertical deflection; D_2, D_2' — Plates for Horizontal Deflection; S — Luminous screen; F_1 — Focus of beam in the absence of deflecting voltage

4. Symmetrical and Asymmetrical Deflection

There are two ways in which the deflecting voltages may be applied to the deflecting plates. In what is known as "symmetrical deflection", the voltages are so applied that the potentials at the two plates of a pair are symmetrical with respect to the accelerator potential. In "asymmetrical deflection", one plate of the D_2-pair, together with the accelerating electrode of the tube and the positive terminal of the H.T. supply are connected to earth, the deflecting voltages being applied to the remaining plates. In this arrangement the field between the two plates of the D_2-pair is not symmetrical with respect to earth.

Asymmetrical deflection requires a much simpler and less expensive circuit than symmetrical deflection, as will be shown later, and for this reason is to be preferred in many applications. It suffers from the disadvantage, however, that the measurements are not quite so accurate as those obtained with symmetrical deflection, and the trace is also subject to a certain amount of disortion of the type known as trapezoidal distortion. These faults can be explained as follows:

With asymmetrical deflection, in which the deflecting system is arranged as shown in Fig. 12*A*, the potential at the midpoint between the two deflecting plates of the D_2-pair is not constant, but is the resultant of a steady potential due to the accelerator and an alternating potential the instantaneous value of which is equal to half the instantaneous value of the deflecting potential applied to the plates. This resultant voltage represents the effective accelerator voltage of the tube — the term V_a in the formula for the deflection (see page 11). Since this voltage is not constant, the actual amount of deflection a for a given deflecting voltage will differ from the calculated deflection by a few per cent.

The trapezoidal distortion resulting from the application of an asymmetrical deflecting voltage is due to the fact that the beam, having been deflected vertically by the first pair of plates, enters the space between the second pair of plates where it is not only deflected horizontally, but is also given a certain amount of vertical deflection — towards the centre of the screen when the potential of the un-earthed plate is positive and towards the periphery of the screen when this plate is negative. The voltage applied to the second pair of plates thus affects the deflection sensitivity of the first pair of plates, so that distortion of the trace occurs.

These disadvantages of the simpler asymmetrical circuit can, however, be greatly reduced by using tubes in which the second pair of plates are so designed that the trapezoidal distortion is eliminated. The voltage to be measured is then applied symmetrically to the first pair of plates, and the time-base voltage is applied asymmetrically to the second pair, as shown in Fig. 12*B*. The only error then introduced is a slight non-linearity of the time base due to the fact that the deflection sensitivity of the plates for horizontal deflection varies slightly with the instaneous value of the time-base voltage.

Further reference to the symmetrical and asymmetrical deflection systems will be made in the chapters dealing with complete oscilloscope circuits.

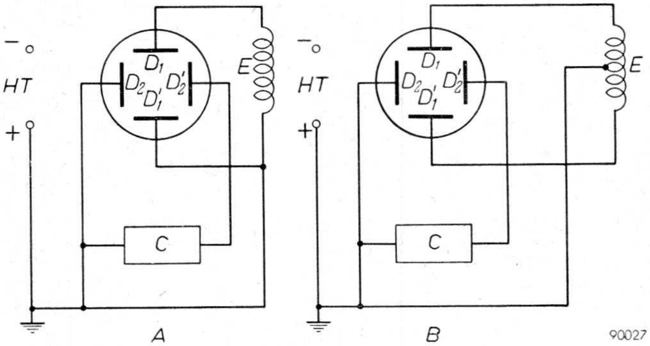

Fig. 12. A—Both horizontal and vertical deflecting voltages applied asymmetrically
B—Horizontal deflecting voltage asymmetrical vertical deflecting voltage symmetrical
C—Time base generator
E—Source of vertical deflecting voltage

5. Intensity Modulation of the Beam

In the paragraph headed "Focusing of the Beam" it was explained that the Wehnelt cylinder or "grid" formed an esseential part of the complete focusing system of the tube. It has, however, also another important function. By varying the negative potential applied to the grid, the rate at which electrons leave the neighbourhood of the cathode, i.e. the value of the beam current, can be controlled. This action is identical to that of the control grid in a thermionic valve, and just as a valve can be "cut off", i.e. rendered non-conductive if a sufficiently great negative grid bias is applied, so can the beam current of a cathode ray tube be reduced to zero (and the trace on the screen blacked out) by applying a heavy negative potential to the grid.

It is thus possible to control the instant at which the trace appears on the screen and its duration, by means of a switch which applies or removes part of the negative grid bias. It is also possible to arrange that the beam current commences to flow automatically as soon as the signal to be examined is applied to the deflection plates. This arrangement provides a method of avoiding all risk of damage to the luminous screen which might occur if a bright spot were allowed to remain stationary on the screen, say due to failure of the deflecting potentials.

Another application of intensity modulation of the beam is automatic control of the brightness of the spot so that as the "writing speed", i.e. the rate at which the spot moves over the screen, increases, the brightness increases in proportion, thus giving a trace of more uniform luminosity. This device is particularly useful when taking photographic records of traces in which the writing speed varies considerably.

Finally, intensity modulation of the beam can be employed to produce bright spots on the trace by means of accurately timed positive-going pulses of grid voltage. These bright spots can then be used for measuring or indicating time intervals during the scan, particularly where very accurate time measurement is required and the linearity of the time base (horizontal deflection voltage waveform) is imperfect so that readings taken from a graticule on the screen will be inaccurate.

6. Post-deflection Acceleration

For a luminous spot of a given size and a phosphor of given efficiency, the brightness depends upon two main factors — the rate at which the electrons forming the beam current reach the screen, and the velocity of these electrons at the instant of impact, and this velocity is determined by the potential difference which the electrons have traversed, i.e. by the final accelerator voltage. From the point of view of brightness of the trace, therefore, it is desirable to operate the tube at a high accelerator voltage.

However, as indicated by the simple equation given in the paragraph "Deflection of the Beam", the deflection sensitivity, that is to say the amount of deflection produced by a given change of the deflecting voltage, is inversely

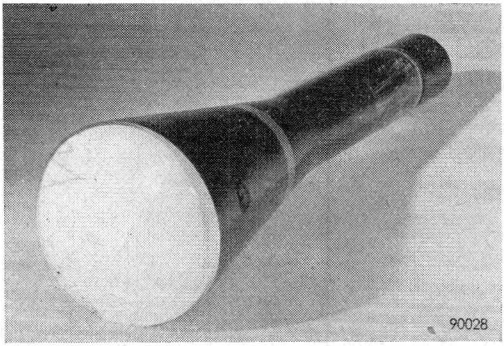

Fig. 13. Photograph of oscilloscope tube with post-deflection electrodes

proportional to the pre-deflection accelerator voltage. Any improvement in spot brightness resulting from increasing the pre-deflection accelerator voltage is therefore accompanied by a reduction of the deflection sensitivity.

This effect can be mitigated to a considerable extent by providing one or more auxiliary electrodes located between the deflecting system and the screen. These "post deflection" accelerating electrodes usually take the form of conductive (graphite) bands on the internal surface of the tube, as indicated in Fig. 13. They are maintained at potentials considerably higher than that of the normal pre-deflection accelerator, and thus a correspondingly brighter spot can be achieved. As, however, this additional acceleration occurs after the beam has been deflected, the deflection sensitivity of the tube is not materially affected.

7. Screen Characteristics

The pattern displayed on the face of a cathode ray tube consists, as already explained, of light emitted by the screen material when bombarded by the swiftly-moving electrons forming the beam. These screen materials are often referred to as "phosphors", but the term is not strictly accurate since the luminous effects do not consist entirely of phosphorescence. There are two main luminous effects which are produced in the screen material. The first is the emission of light while the electrons are actually striking the screen; this is called fluorescence, and ceases immediately the electrons cease to fall upon the screen material. The second effect, correctly termed phosphorescence, is the after-glow which continues for a short time after the fluorescence has ceased.

There are very many different materials suitable for use as "phosphors". They differ in their brightness characteristics, that is to say the amount of light emitted per unit area for a given beam current density per unit area; in the colour of the emitted light; and in their "persistence", i.e. the duration of the after-glow.

Typical of the screen materials used in the modern oscilloscope tubes are those represented by the letters B, G and P in the type-numbers of the tubes described in Chapter VII. The characteristics of the screens are given below.

Type B screen material gives a bluish luminescence of short duration

Type G screen material gives a green trace of medium persistence

Type P is a double-layer screen giving a bluish trace of short persistence followed by a greenish-yellow phosphorescence of long persistence.

Fig. 14 shows the persistence characteristic, the relative spectral energy distribution and the brightness characteristic of each type of these screens.

Fig. 14 a to i. Graphs showing persistence characteristics relative spectral energy distribution and brightness characteristics of types B, G and P Screens

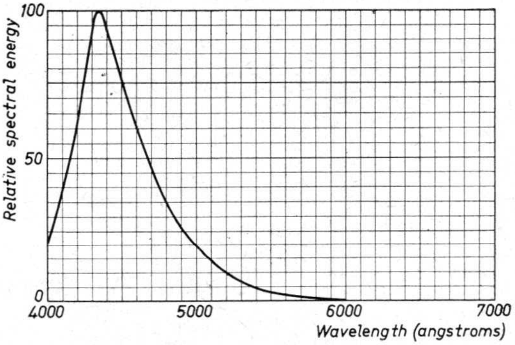

(a) Relative spectral energy, distribution of a B-screen

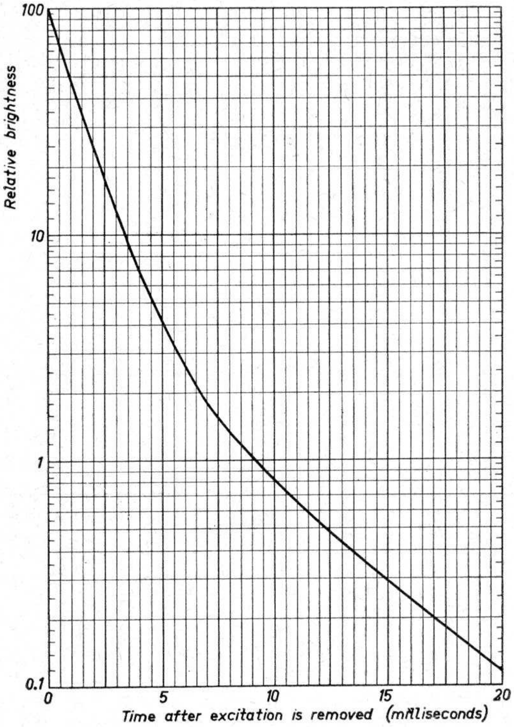

(b) Persistence characteristic of a B-screen

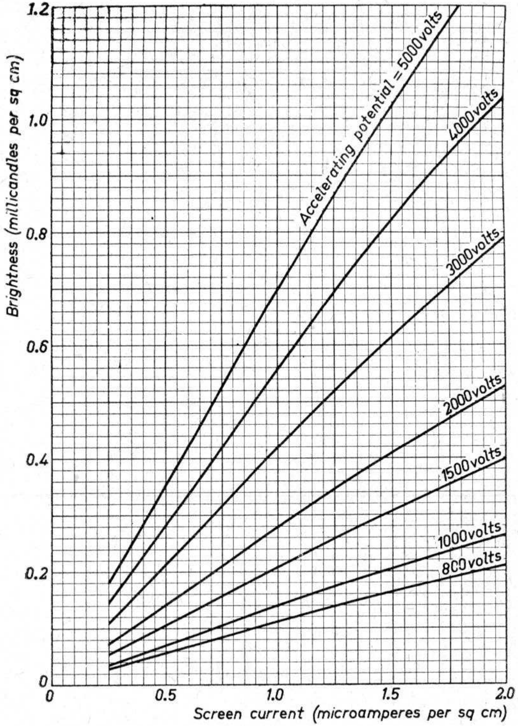

(c) Brightness of a B-screen as a function of the screen current per square cm screen area, with the accelerating potential as parameter

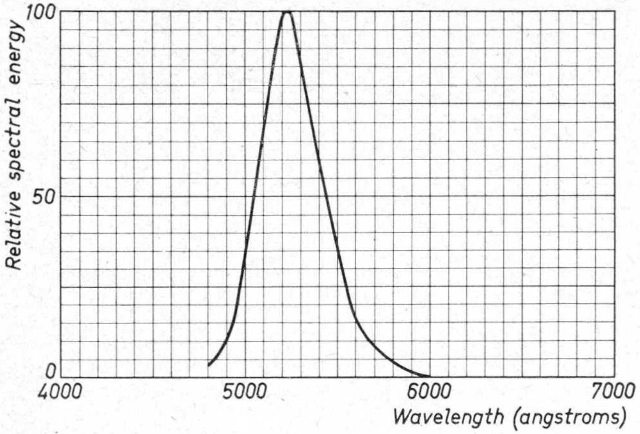

(*d*)

Relative spectral energy distribution of a G-screen

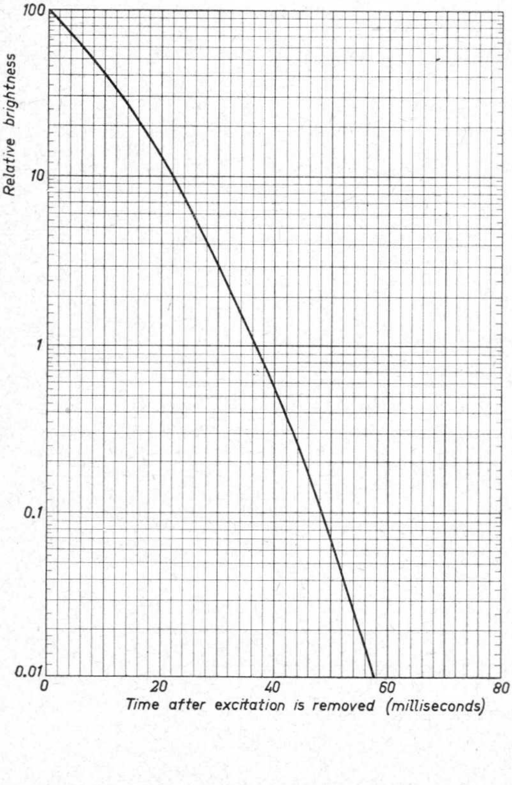

(*e*) *Persistence characteristic of a G-screen*

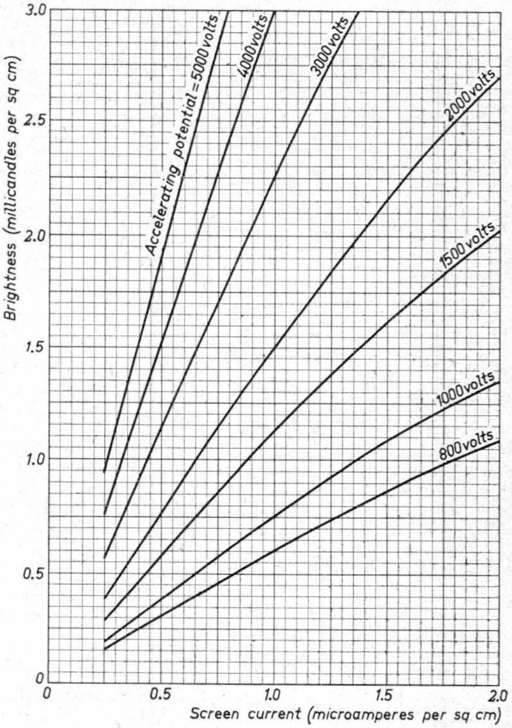

(f) Brightness of a G-screen as a function of the screen current per square cm screen area, with the accelerating potential as parameter

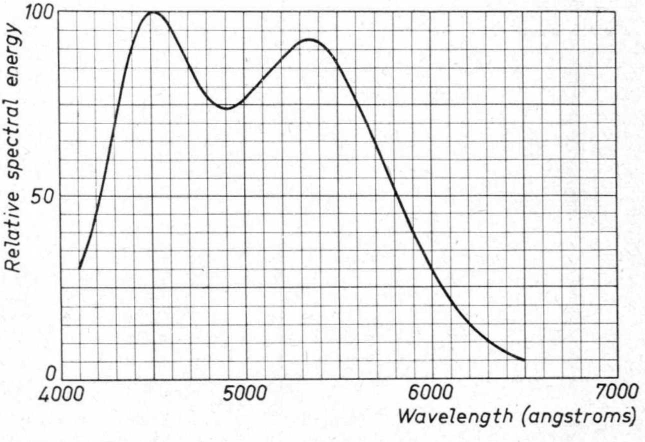

(g) Relative spectral energy distribution of a P-screen

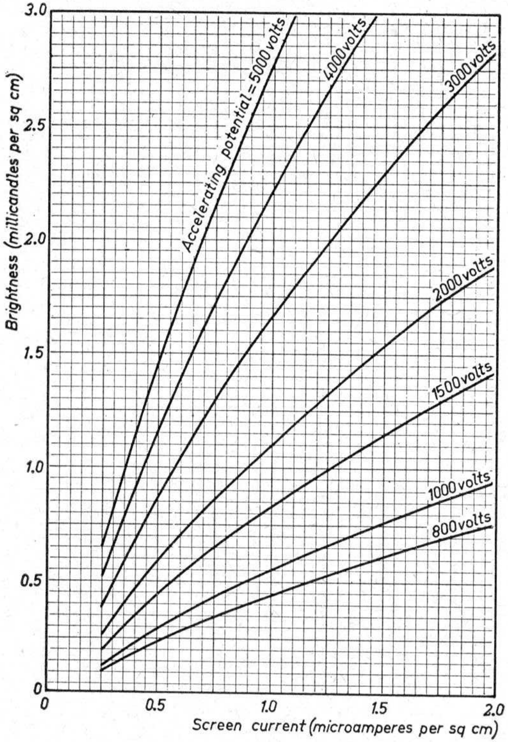

(h) Brightness of a P-screen as a function of the screen current per square cm screen area, with the accelerating potential as parameter.

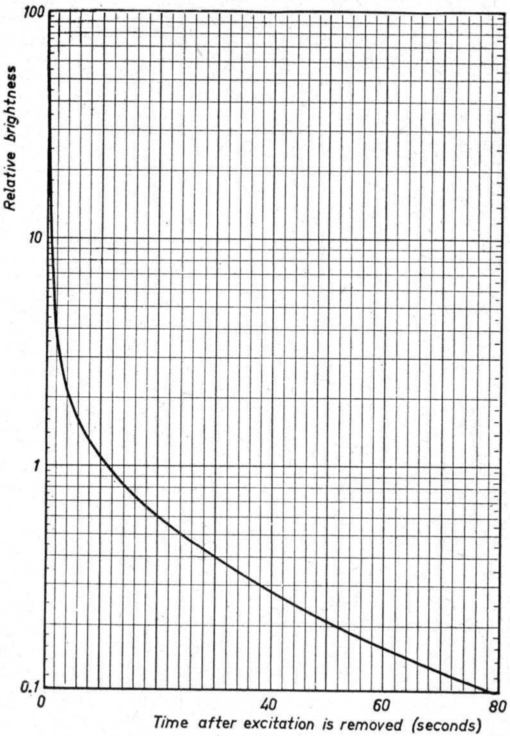

(i) Persistence characteristic of a P-screen

8. Cathode Ray Tube Manufacture

The manufacture of cathode ray tubes is an industry which involves a wide variety of processes and techniques, the use of intricate and ingenious automatic machines, and great skill and dexterity on the part of the operators.

First of all the many different component parts of the tubes have to be made to very close dimensional tolerances and from materials of the highest purity. These include tubular nickel cathodes, the end coated with the special emissive material; heaters, made from fine tungsten wire and insulated with alundum; grids and anodes of various forms, made from special non-magnetic material; the ceramic supports upon which the electrodes are mounted; and glass parts of various shapes. After manufacture every component is gauged and inspected, faulty ones being rejected. The components are then chemically cleaned and heat-treated before they are issued to the assembly department.

In the assembly shop, where a high standard of cleanliness is maintained, specially trained skilled girls assemble the electrodes on the supporting rods, using ingenious jigs and spacing pieces to ensure that each electrode is correctly located. A liquid ceramic cement is then applied to secure each component in position. At this stage certain internal joints and connections

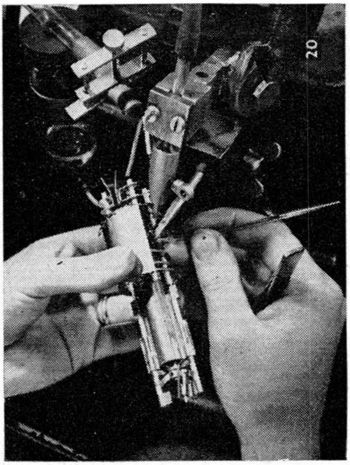

Fig. 15. Assembling the gun by spot welding

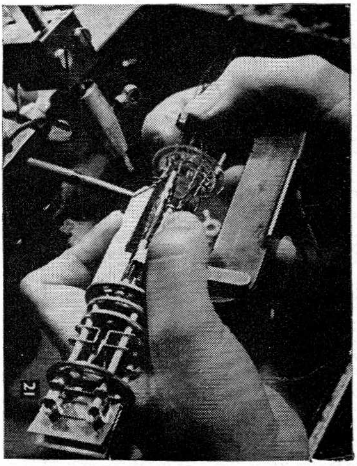

Fig. 16. Welding the gun assembly to the glass mount

are made by electric spot welding, the parts to be joined being first manipulated into position with tweezers, as shown in Fig. 15. The next stage is to join the electrode assembly to the glass mount into which are moulded the necessary lead-in wires (See Fig. 16). These wires are themselves of a complex nature, for they consist of an upper portion of stout nickel wire to which the electrode system is welded, a lower portion of high conductivity copper wire which is later soldered to the appropriate contact pin in the insulating base, and a short central portion made from a special metal having the same coefficient of expansion as the glass so that it forms a vacuum-tight seal at the point where the wire passes through the glass mount. The mount also carries a central glass stem through which air is withdrawn from the bulb during the pumping process.

The assembly is now carefully inspected. Its overall dimensions and the inter-electrode clearances are checked; all welded joints are tested, and any errors in alignment are rectified.

Meanwhile the bulbs or envelopes have been prepared to receive the electrode assemblies. Blown from special quality glass, by ingenious automatic machines, the bulbs are carefully annealed to normalise any internal stresses set up during the blowing process. Next, each bulb is washed continuously for a considerable time with a powerful acid, rinsed many times with distilled water, and carefully dried. This treatment ensures that the bulb contains no foreign substance which could contaminate and spoil the luminescent screen which is later deposited on the inner surface of the flattened end of the bulb.

The application of the luminescent screen is a highly skilled and delicate operation. The luminescent material, in the form of a fine powder, is mixed with a liquid binding agent to a thin paste. An accurately measured quantity is poured into the bulb, a deft twist of the hand ensuring that it is evenly distributed over the flat end of the bulb. The bulb is then placed in an oven where the coating is baked on and the volatile binding agent evaporated. The inner surface of the sides of the conical portion is then coated with colloidal graphite, forming a conductive layer.

Now the electrode assembly is inserted into the neck of the bulb, spring lugs on the anode making a good connection between the anode and the internal conductive coating. The whole is next mounted in a machine where gas flames play upon the neck of the tube in such a way that the glass mount and the tube neck soften and fuse together, and the excess portion of the tube neck falls away. With the electrodes thus sealed into the envelope, the only connection between the inside of the envelope and the outer air is through the thin pumping stem. The cathode ray tubes are then mounted on a rotating table, their pumping stems being connected to powerful air pumps which withdraw the air from the bulbs. While being pumped the tubes pass through a tunnel which is strongly heated to help drive off the air and other gases. On emerging from the tunnel, the getter — a chemical material previously attached to the electrode assembly — is volatilised by high frequency heating, and absorbs the last traces of gas, thus forming a vacuum of a very high order.

The pumping stem is now sealed off, and the completed tubes removed from the pumping table (See Fig. 17).

It only remains to fit the base and solder the base connections, to submit the tubes to an ageing process, and to conduct the stringent factory tests. The tubes then pass to finishing benches where the type number and other markings are etched on the tube, after which they are given a final inspection before being packed in their specially designed cartons.

9. Methods of Displaying or Recording

Information concerning any quantity which can be translated in terms of a voltage, or the relationship between two such quantities, can be displayed on the screen of a cathode ray oscilloscope. This information can be recorded in several ways — temporarily for immediate inspection, or photographically as a permanent record.

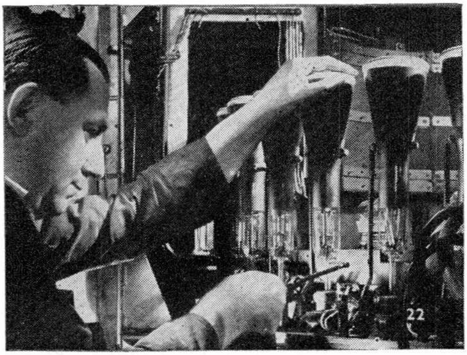

Fig. 17.
Sealing off the completed tube

10. Measurement of a Single Quantity

The simplest, but not the most usual type of display is the indication of the value of a single quantity. The voltage representing the quantity to be measured is applied between the two plates for vertical deflection, but the plates for horizontal deflection are not used.

In the case of a direct voltage or current, the value of the quantity under examination is indicated by the amount of the vertical deflection of the spot from its zero or no-signal position (See Fig. 18*A*). For alternating quantities, however, the value is indicated by the height of a vertical illuminated line which corresponds, in fact, to twice the peak amplitude of the quantity (See Fig. 18*C*).

These applications are, of course, identical with the function of an ordinary indicating instrument such as a voltmeter, and cathode ray tubes are, indeed, frequently used in this way instead of moving coil or moving iron instruments.

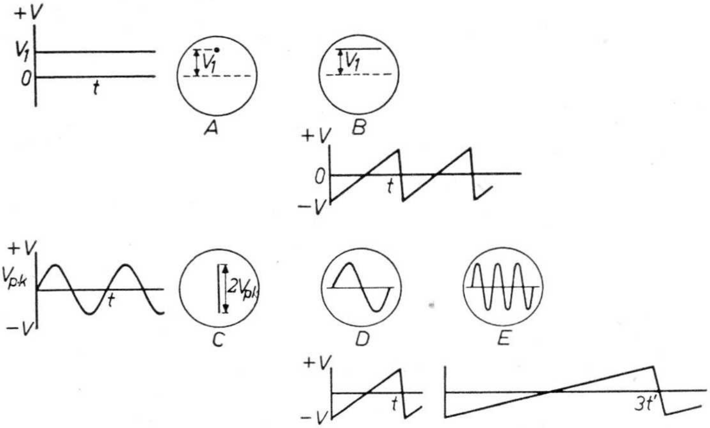

Fig. 18. A — Direct voltage is represented as a deflected spot in the absence of a horizontal deflection voltage

B — With a sawtooth voltage applied to the plates for horizontal deflection a direct voltage is represented by a horizontal line

C — In the absence of a timebase voltage, a sinusoidal alternating voltage is represented by a vertical line

D & E — With a time base applied, the sinusoidal waveform is exhibited

For such applications the cathode ray tube possesses the advantages already mentioned, namely, that the beam which acts as the movement and pointer, possesses no inertia and therefore gives an instantaneous reading; and also that the instrument imposes no load on the circuit to be measured and thus introduces no error. It also has two further advantage: first, it cannot be damaged by overloading or by incorrect connections, and second, it is an extremely simple matter, by means of suitable amplifiers or attenuators, to change the scale or range of the instrument.

11. Indicating the Relationship between two Quantities

This is the more usual type of application of the cathode ray oscilloscope, and one which no other instrument can perform satisfactorily. Several different cases arise, according to the nature and properties of the phenomena concerned.

12. Indicating the Relationship between two Quantities one of which is Time

The simplest example in which the variation of one quantity over a period of time is displayed, is the examination of waveforms. Other examples are described in some detail in Chapter VI. For these applications the voltage to be examined is normally applied between the plates for vertical deflection, and a voltage which increases linearily with time is applied between the plates for horizontal deflection.

Two cases arise. The first is that in which the voltage to be examined is cyclic or periodic, a familiar example being a normal sinusoidal alternating voltage. In this class of application the time base voltage for horizontal deflection must be of sawtooth wave form as indicated in an earlier section, and its frequency must be equal to, or a sub-multiple of, the frequency of the voltage under examination. In order to ensure this, a part of the voltage to be examined may be fed to the circuit which generates the sawtooth voltage, in order to synchronise the two deflecting voltages. Traces in which the time base frequency is equal to and one third of the frequency of the voltage under examination are illustrated in Fig. 18, *D* and *E*.

The second case is that in which the phenomenon to be observed is not cyclic but occurs only once, or at irregular intervals. Ideally, this class of investigation requires a single-sweep time base so that the horizontal deflection is continuous from left to right during the whole period of the phenomenon.

This can, of course, be arranged without much difficulty if the instant at which the transient commences and its duration are known, for it is then possible to adjust the speed (frequency) of the time base voltage and to trigger it automatically so that the horizontal deflection commences just before the commencement of the transient and continues throughout the period of the phenomenon. If the timing of the phenomenon cannot be predicted, it may suffice, for visual examination, to use a normal repeating time base of suitable frequency, and to trust to good fortune that the phenomenon will occur at an appropriate time in the scanning cycle. A much better arrangement, now commonly employed, is to use the arrival of the transient signal for triggering the time base so that horizontal deflection commences, and to delay the application of the signal to the verical deflecting plates by a small fraction of a second so that the actual trace does not start until the time base is in operation. A block diagram representing this his arrangement is shown in Fig. 19. For the majority of transient investigations, however, it is desirable to produce a permanent record, and this can be obtained photographically using the moving film technique described later in this chapter.

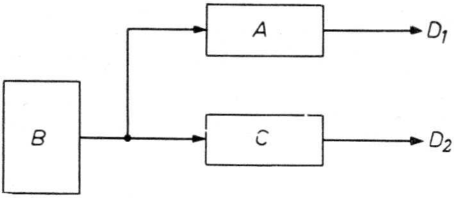

A — Delay circuit; B — Source of signal; C — Time base generator; D_1 — Delayed transient applied to plates for vertical deflection; D_2 — Triggered sawtooth voltage applied to plates for horizontal deflection

Fig. 19. Block diagram showing method of ensuring that the time base generator operates at the correct instant to indicate a transient phenomenon

13. Indicating the Relationship between two Quantities neither of which is Time

In addition to providing information regarding a single quantity which varies with time, the cathode ray oscilloscope can be used to compare or to show the relationship between two phenomena which vary simultaneously. This is done by applying a voltage corresponding to the variation of one phenomenon to the plates for vertical deflection, and a voltage corresponding to the variation of the second phenomenon to the plates for horizontal deflection.

Representative practical examples of the infinite variety of such applications are described in Chapter VI, and it must suffice to mention here only a few.

A typical example of the comparison of two varying phenomena is the measurement of the phase difference between two sinusoidal voltages, by applying one of the voltages to one pair of deflecting plates and the second voltage to the other pair of plates. If one voltage only were applied, say to the plates for vertical deflection, the trace would appear as a straight vertical line. Similarly, if one voltage only were applied to the plates for horizontal deflection the trace would be a straight horizontal line. With the voltages applied to the two sets of plates simultaneously, the trace appears as a straight line forming the diagonal of the pattern area, as shown in the left-hand diagram of Fig. 20, *provided the two voltages are in phase.* If, however, there is a phase difference between the two voltages the trace will no longer be a straight line but will be a closed figure of elliptical form, the width (minor axis) of the figure being a measure of the phase difference (See right-hand diagram of Fig. 20). By arranging that the amplitudes of the vertical and horizontal deflections are equal, the actual phase difference can be calculated from the lengths of the major and minor axes of the ellipse.

Another similar class of measurement includes what may be termed "cause

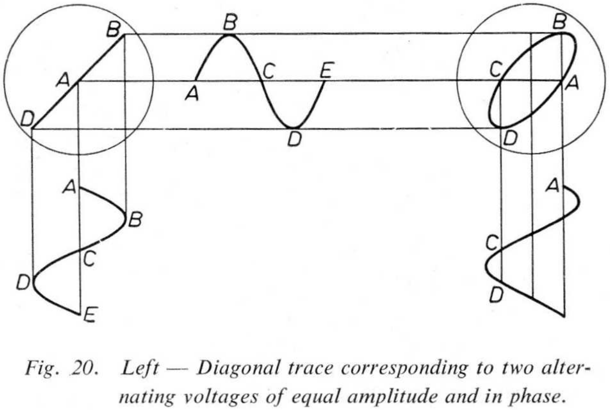

Fig. 20. Left — Diagonal trace corresponding to two alternating voltages of equal amplitude and in phase. Right — Elliptical figure representing two alternating voltages of equal amplitude but with a phase difference

and effect" measurements, a typical example of which is the determination of the characteristic curves of a thermionic valve. To take the I_a/V_g characteristics, for example, a voltage proportional to the anode current is applied to the plates for vertical deflection, and an alternating signal voltage of suitable amplitude is applied to the control grid and also to the plates for horizontal deflection.

14. Photographic Recording

The luminous trace on the screen of a cathode ray oscilloscope is not only available for immediate visual examination, but it can also be photographed. The photographs can then be subjected to a more detailed examination at leisure; they can be reproduced to illustrate books, articles or lectures; and they often form useful and valuable permanent records. Many of the illustrations in this book, for example Figs 5 and 6, are reproduced directly from actual photographs of traces.

Photography of the trace displayed by a cathode ray oscilloscope presents a number of problems not usually encountered in studio photography. In the first plase, the amount of light produced on the screen, and available for affecting the photographic plate or film is very small, so that relatively "fast" films of special type must be used, especially for single-shot recordings and those where the writing speed is high. The type of film must also be selected with due regard to the colour of the trace.

Furthermore, it frequently happens that, owing to the small amount and low actinic quality of the light available, the films are of necessity under-exposed, and special measures then have to be taken during development and printing.

Detailed discussion of the technique of photographing oscillograms is outside the scope of this book, and readers interested in this process are referred to the makers of photographic films, many of whom publish informative bulletins on the subject.

There are two principal methods of photographic recording. In what is known as the "single shot" method, as depicted in Fig. 21, a special camera attachment is employed and the screen is photographed in the conventional way.

If the phenomenon being investigated is repetitive so that the trace is reasonably steady, the exposure can be prolonged so that several successive

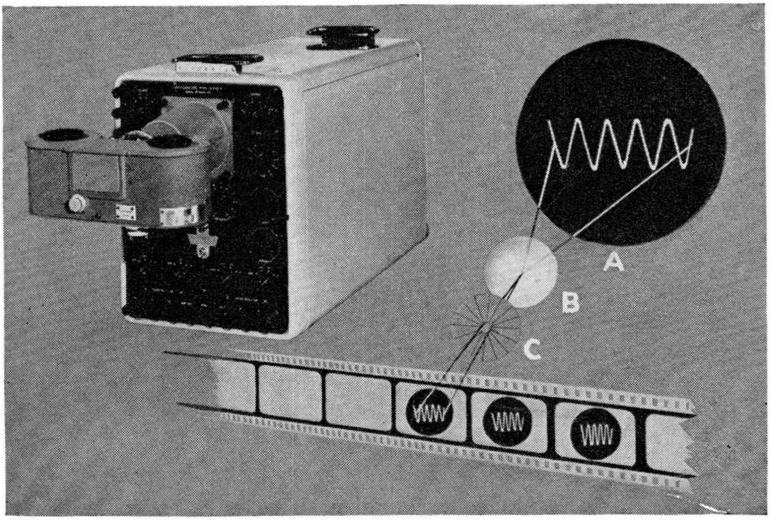

Fig. 21. Photographic recording — single shot method
A — Screen; B — Lens; C — Iris

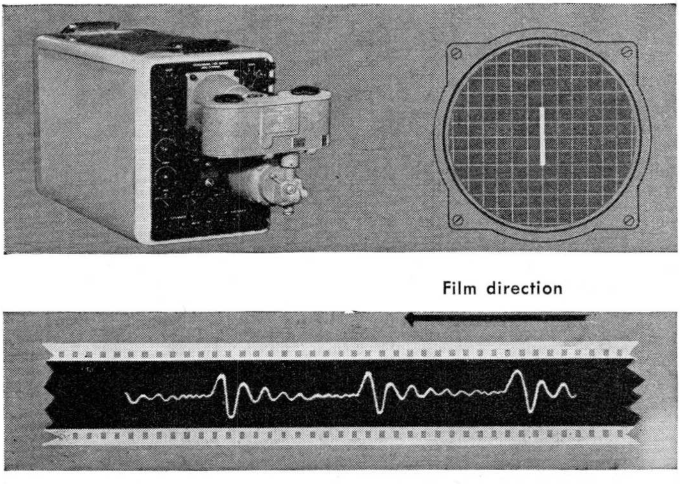

Fig. 22. Photographic recording — moving film technique in which no time base is required

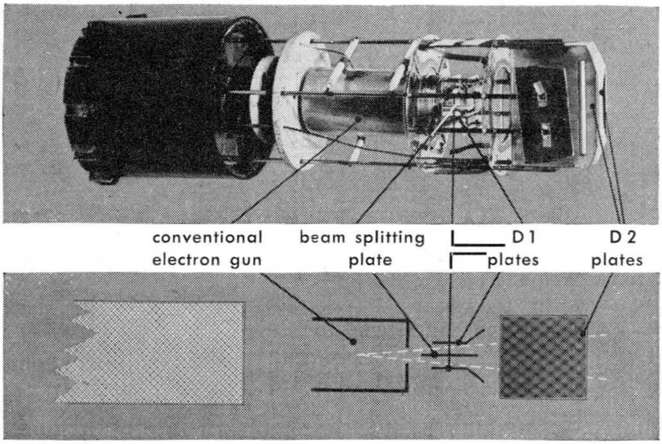

Fig. 23. Cathode ray tube with beam splitting plate

traces are superimposed on one film, and the risk of under-exposure is thus reduced at the expense of some small degree of blurring.

The second method is the "moving film" technique, and is illustrated in Fig. 22. It is chiefly employed for recording transients and also cyclic phenomena such as the sound of heart-beats, in which the waveforms in successive cycles are not always identical. In this method the voltage to be examined is applied to the plates for vertical deflection, but no time base voltage is applied to the horizontal deflecting plates. The film however, is caused to move at a uniform speed in the horizontal direction during the period of the exposure, this movement producing the same effect as the time base voltage.

When transient phenomena occurring at random intervals are recorded by this method, the delay circuit described in an earlier paragraph is often

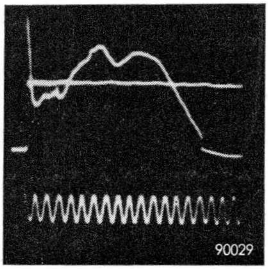

Fig. 24. Oscillogram in which the lower trace is modulated to provide a time scale.

employed to avoid waste of film. In this case, the arrival of the transient signal is used to start up the film driving mechanism, and the signal which is applied to the vertical deflecting plates is delayed by a short period of time to allow the drive mechanism to achieve its normal speed.

By using a special form of cathode ray tube fitted with what is known as a "splitter plate" (See Fig. 23), two beams are formed, and one of these can be momentarily deflected vertically at a known frequency, say 50 cycles per second. This trace is then recorded below the oscillogram of the voltage under investigation, and thus provides a time scale by means of which the duration of the main trace can be measured. A typical example is reproduced in Fig. 24.

CHAPTER III

THE TIME BASE

As already mentioned, an oscilloscope must include means for generating a "sawtooth" voltage which is applied between the plates which produce the horizontal deflection of the spot. The general waveform of this voltage is indicated in Fig. 25.

1. Requirements for a Sawtooth Voltage

The requirements for this voltage are as follows:

First, the voltage must first increase from zero to a maximum at a uniform rate so that the horizontal deflection shall be a linear function of time. This part of the cycle is called the stroke, and corresponds to the region *a-b* in Fig. 25.

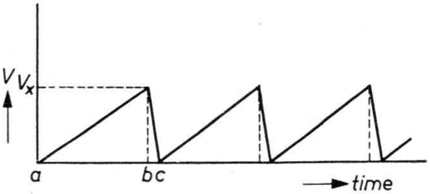

Fig. 25. Ideal waveform for oscilloscope time base
a—b = stroke b—c = flyback

Second, when the deflecting voltage has reached its maximum value, and the spot has therefore reached the end of its horizontal travel, the voltage must suddenly fall to zero in the shortest possible time, so that the spot returns to the left hand edge of the screen, ready to commence a new stroke.

This period is called the flyback, and corresponds to the region *b-c* in Fig. 25.

Third, the frequency of the sawtooth voltage must be adjustable to permit the examination of phenomena occurring at different speeds or at different frequencies.

2. Basic Principles

There are many methods whereby such a sawtooth voltage can be generated, but before describing the methods usually employed and giving the practical circuits in which they are used, it will be of interest to describe a simple mechanical device which serves the same purpose.

In Fig. 26, *P* is a potentiometer connected across a direct current source, indicated as a battery, *B*. The negative terminal of the battery is connected to one of the plates for horizontal deflection, and the other plate is connected to the slider of the potentiometer.

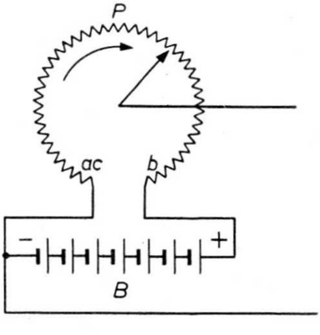

Fig. 26. Simple mechanically operated sawtooth generator. Clockwise movement of the potentiometer slider from a to be constitutes the stroke, and further movement from b to c constitutes the flyback.

Imagine that the slider is intially at *a*, the negative end of the potentiometer. Both plates will then be at the same potential. If, now, the slider is rotated clockwise at uniform speed, the voltage between the plates will increase, also at uniform speed, until the slider reaches *b*, the positive end of the potentiometer, when the voltage between the plates will be at a maximum, equal to the whole voltage of the battery. A very slight further movement of the potentiometer in the same direction now brings the slider to *c* at the negative end again, when the potential difference between the plates immediately drops to zero.

Thus, the first two requirements of a time base voltage are fulfilled. By altering the speed at which the slider rotates, the frequency of the voltage cycle can be adjusted, thus fulfilling the third requirement.

A mechanically driven time base operating on this or some similar principle would be suitable for only a very limited number of oscilloscope investigations. For the majority of practical applications an automatic device containing no moving parts is essential, and this can be achieved electronically in a number of ways.

3. Methods of Generating a Sawtooth Voltage

One way of producing a direct voltage which rises gradually from zero to a maximum value is shown in Fig. 27.

Here, a capacitor *C* is connected in series with a resistor *R*, across a direct voltage source. On switching on, current will flow through *R* to charge the capacitor *C*. At first the charging current is large, and most of the applied voltage is dropped in *R*, so that only a small voltage appears at the output terminals. But as the capacitor becomes charged the charging current decreases and the voltage across the capacitor appearing at the output terminals increases until, after a period of time determined by the capacitance of *C* and the resistance of *R*, practially the whole battery voltage is available at the output.

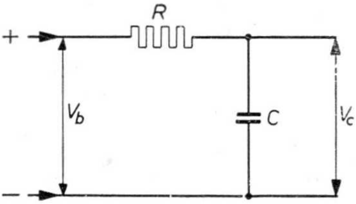

Fig. 27. The "stroke" can be produced by the gradual charging of capacitor C from a direct voltage source via resistor R.

The voltage across the capacitor during the charging period, plotted against time, gives a graph of the general form shown in Fig. 28. It will be agreed that this curve is very different from the ideal straight line required for the first part of a time base voltage. But by employing only the lower part of the curve, indicated by a heavy line in Fig. 28, a reasonably good approximation to a straight line is obtained.

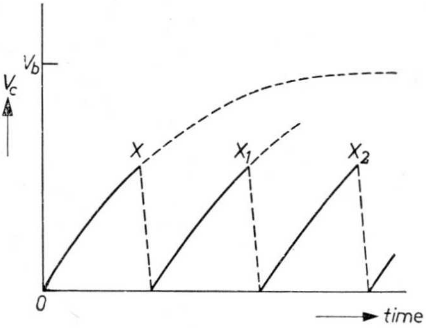

Fig. 28. Graph showing variation of voltage across a capacitor during charge. By employing only a part of the curve up to point X and then arranging for the capacitor to be rapidly discharged, an approximation to the ideal sawtooth waveform can be produced.

4. The Flyback

We have now produced the rising portion of the sawtooth voltage, and it now remains to produce the "flyback", that is to say we must ensure that, at the point X in Fig. 28, the voltage rapidly drops to zero as shown by the dotted line.

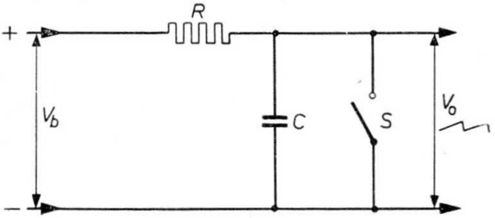

Fig. 29. By closing switch S momentarily at times corresponding to points X, X_1, X_2 . . . in Fig. 28. and thus discharging the capacitor, a continuous sawtooth voltage is obtained.

This can be done in a crude way by means of the switch S in Fig. 29. If this switch is closed at the instant corresponding to X in Fig. 28, the capacitor is short-circuited and discharges through the switch, and the voltage across is falls to zero. The discharge is not absolutely instantaneous, but takes a finite time depending upon the value of C and the resistance of the switch. The latter can be made very small so that the discharge is for all practical purposes instantaneous. In practice the shape of the discharge curve will be similar to that shown in dotted line in Fig. 30.

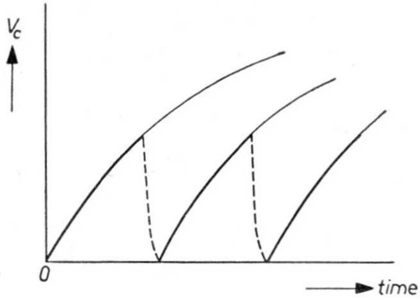

Fig. 30. Actual form of sawtooth voltage obtainable from the arrangement shown in Fig. 29

It has now been shown how one complete cycle of a sawtooth voltage can be obtained by the gradual charge and rapid discharge of a capacitor. It now remains to make this process continuous, by providing means for closing switch *S* for a very short time and opening it again, at regular intervals corresponding to the desired frequency of the sawtooth voltage.

5. Simple Basic Circuits

The simplest way of achieving this is to replace switch *S* in Fig. 29 by a neon tube NT as shown in Fig. 31. When the voltage across the capacitor reaches a value corresponding to the ignition voltage of the neon tube, the tube conducts and rapidly discharges the capacitor. The voltage applied to the tube then drops to a lower voltage at which the tube becomes non-conductive again, allowing the capacitor to recharge, and the whole cycle repeats.

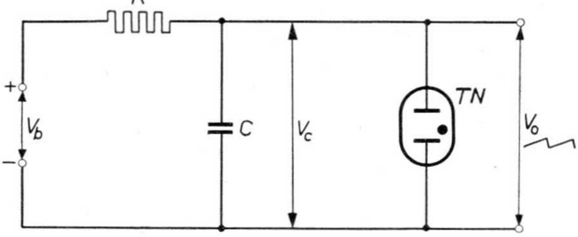

Fig. 31. By replacing switch S in Fig. 29 by a neon tube NT, alternate gradual charge and rapid discharge of capacitor C occurs at regular intervals of time

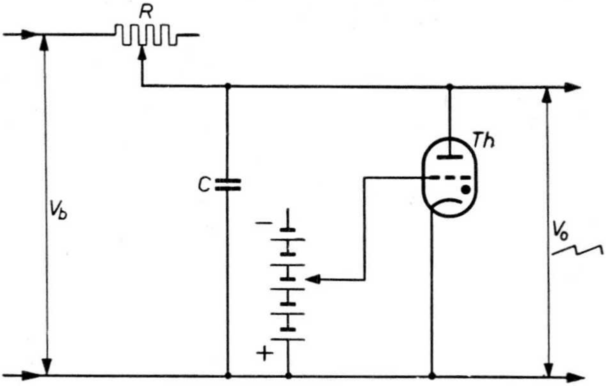

Fig. 32. Improved circuit using a thyratron instead of a gas-filled diode as electronic switch.

The main disadvantage of this arrangement is that, with fixed values of *C* and *R*, and with a given neon tube, there is only one fixed repetition frequency, since the voltage at which the neon tube fires is fixed.

In order to obtain an adjustable frequency, the neon tube may be replaced by a thyratron, as shown in Fig. 32. By varying the grid bias applied to the

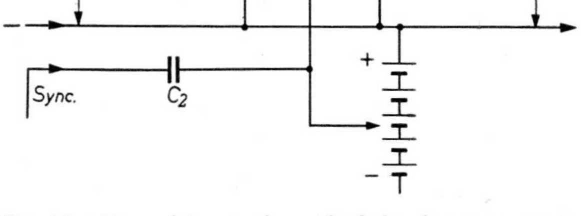

Fig. 33. By applying to the grid of the thyratron positive going pulses derived from the circuit for vertical deflection, the time base can be synchronised with the phenomenon under examination

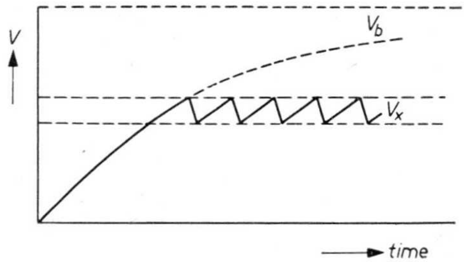

Fig. 34. As an alternative to the mode of operation shown in Fig. 30, it is often desirable to use some other part of the charging curve. The output is then a steady direct voltage with a sawtooth voltage superimposed.

thyratron, the voltage at which the thyratron ignites and becomes conductive can be adjusted. Another advantage obtained by using a thyratron as an electronic switch is that the time base can be easily synchronised with the phenomenon under examination, by applying a part of the vertical deflecting voltage to the grid of the thyratron. Fig. 33 shows how this may be done. The standing grid bias is first adjusted until the frequency of the time base sawtooth voltage is a little slower than that of the vertical deflection voltage. A synchronising pulse, derived from the vertical deflection voltage, is applied to the grid of the thyratron via the capacitor C_2, and this pulse triggers off the time base in perfect synchronism.

6. Linearity

It has already been pointed out that the waveform of the time base voltage generated by any of the methods so far described is not absolutely linear, that is to say the graph representing the change of voltage during the stroke is not a straight line but is slightly curved as shown in Fig. 30. This means that the speed at which the spot travels across the screen is not uniform, but decreases at the end of the stroke. It can be shown mathematically that this velocity error is equal to the ratio between the voltage to which the capacitor is charged and the total voltage available for charging. For example, if an error of 10 per cent, is permissible, the capacitor must be charged to only one tenth of the applied voltage.

Some steps which may be taken to improve the linearity of the *generated* waveform will be described later in this chapter, but before doing so, certain other causes of non-linearity must be mentioned.

What may be termed "parasitic" non-linearity can be introduced by the coupling circuit between the time base generator proper and the deflection

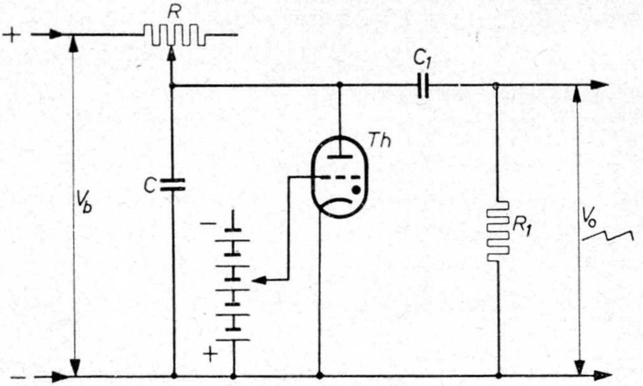

Fig. 35. Sawtooth generator similar to that shown in Fig. 32, but with a resistance-capacitance coupling circuit C_1R_1

plates of the cathode ray tube. It is seldom that the deflecting voltage is applied directly to the deflection plates; in most cases a resistance-capacitance coupling circuit is interposed, and frequently it is also necessary to include an amplifier in order to provide a sufficiently great deflecting voltage.

For example, the simple arrangement of Fig. 28 wherein the capacitor is charged to point X and then completely discharged to give the waveform shown in Fig. 30, may be replaced by an arrangement in which the capacitor is only partially discharged, giving a waveform as shown in Fig. 34. This means that the output consists of a direct voltage upon which is superimposed a sawtooth (alternating) voltage, and it may then be desirable to filter out the direct component. The basic circuit of Fig. 32 then becomes as Fig. 35.

7. Effect of Coupling Element on Linearity

The coupling circuit introduces two factors which affect linearity. In the first place, the direct voltage component appearing across the coupling capacitor C_1 affects the rate of charge of the main capacitor C. The error thus introduced can be minimised by making the value of the coupling resistor R_1 large compared with the charge resistor R. If R_1 is more than 10 times R, the error will be negligibly small.

The second error introduced by the coupling circuit C_1 R_1 is due to the fact that, unless the time constant (the product of C_1 and R_1) is sufficiently high compared with the period of one cycle, the voltage at the output terminals will not be a true image of the voltage across C. The amount of the velocity error so introduced thus depends upon the ratio between T, the time period of one sawtooth cycle, and the product of R_1 and C_1.

The relationship between the error and the ratio T/R_1C_1 is shown in the curve reproduced in Fig. 36. From this curve suitable values of R_1 and C_1 for various applications can be calculated. Since the value of R_1 is more or less dictated by the requirement that it should be more thans 10 times the value of R the problem usually resolves itself into the calculation of a suitable value for C_1.

As an example, assume that R_1 is 3MΩ and the sawtooth frequency is 50 c/s. It is desired to find what values should be chosen for C_1 in order that the velocity error shall not exceed 10%.

From the curve of Fig. 36, for a velocity error of 10% the value of T/R_1C_1 must not exceed 0.1.

$$\text{i.e. } T/R_1C_1 = 0.1$$

$$\text{or } C_1 = \frac{10}{50 \times 3 \times 10^6} = 66{,}000 \text{ pF.}$$

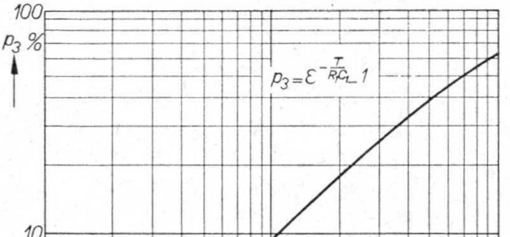

Fig. 36. Percentage velocity error in the circuit of Fig. 35, as a function of the ratio T/R_1C_1

If the velocity error has to be restricted to 1%, the value of T/R_1C_1 must not exceed 0.01, whence $C_1 = 0.66\mu F$.

8. Effect of an Amplifier on Linearity

In many time base circuits it is necessary to amplify the generated sawtooth voltage, and the amplifier itself may introduce a measure of non-linearity. Any such error due to the curvature of the valve characteristic will not be discussed at this stage for two reasons. In the first place it is not a difficult matter to design an amplifier which produces very little distortion; and in the second place, as will be shown later, it is possible to take advantage of the distortion due to the curvature of the valve characteristic, to compensate to some extent for the non-linearity of the generated sawtooth wave form.

There is, however, a further error of linearity introduced by an amplifier, and this error can be regarded as a special case of the velocity error introduced by coupling elements and already discussed in the previous paragraph. This is because the total impedance of the anode circuit of an amplifying valve is a composite quantity made up of the anode load, the output capacitance of the valve, the wiring capacitance, and the input capacitance of the following amplifying valve, if any.

Such an amplifier may be represented by the equivalent circuit shown at *B* in Fig. 37, where R_i is the internal resistance of the valve, R_a the anode load, and C_1 the total capacitance and S is the mutual conductance of the valve. This equivalent circuit can be simplified to the form shown at *C*, where R_1 is the resistance of R_i and R_a in parallel.

As in the case of the simple resistance-capacitance coupling circuit, it can be shown that the linearity of the output voltage Vc_1 depends upon the ratio T/R_1C_1 where T is the time period of one cycle of the sawtooth voltage.

The instantaneous values of Vc_1 over one complete period T are plotted in Fig. 38, for various values of T/R_1C_1. It will be observed that perfect linearity is achieved only when T/R_1C_1 is infinitely large. At smaller values of T/R_1C_1 there is a velocity error during the early portion of the stroke, and this error extends over an increasing proportion of the stroke for values of T/R_1C_1 below 100.

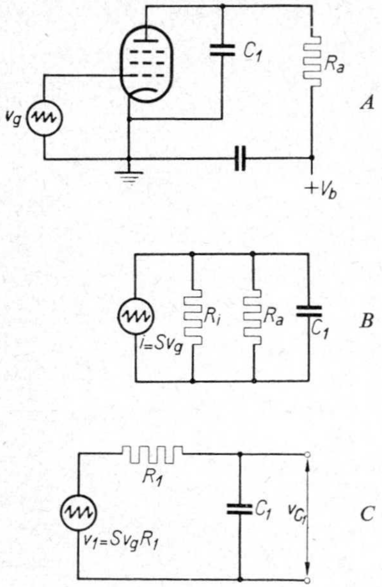

Fig. 37.

A: Basic circuit of sawtooth generator followed by a single-valve amplifier.
C_1 is the combined capacitance of the coupling capacitor, the valve and the wiring.

B: Equivalent circuit
R_a is the coupling resistance
R_i is the internal resistance of the valve.

C: Equivalent circuit in which R_1 is equivalent to R_i and R_a in parallel.

The significance of this can be made clear by a practical example. Assuming a time base frequency of 20 kc/s and the value of R_1 to be 10 kΩ, and further assuming that a degree of linearity corresponding to $T/R_1C_1 = 100$ to be acceptable, the maximum permissible value of C_1 will be:

$$C_1\,(\text{max.}) = \frac{T}{100\,R_1} = \frac{1}{2 \times 10^4 \times 100 \times 10^4} = 50\,\text{pF}.$$

If, however, the frequency is higher, say 100 kc/s, a similar calculation shows that the maximum permissible value of C_1 would be only 10pF. This value, however, is smaller than the total capacitance in most normal circuits. Good linearity at this frequency can be obtained only by reducing the value of R_1, and this can be achieved by reducing the anode load R_a, but only at the expense of smaller gain in the amplifier.

At very high time base frequencies, therefore, special methods of compensation may have to be employed, but these methods are outside the scope of the present book.

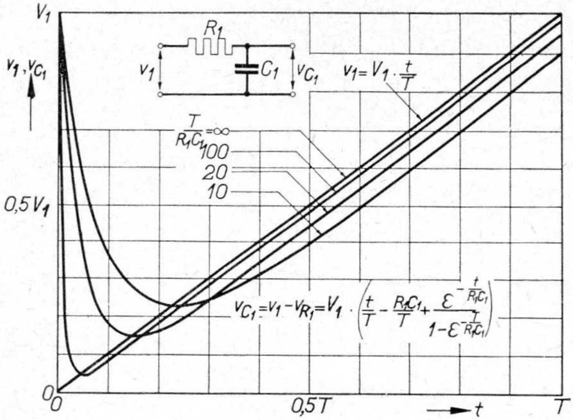

Fig. 38. Instantaneous values of V_{C_1} *in Fig. 37 plotted against time for different values of* T/R_1C_1

9. Methods of Improving Linearity

Departure from true sawtooth shape in the time base voltage, shown as a velocity error during the stroke, has been shown to be due to the non-uniform rate of charging of the capacitor, and to the inclusion of a coupling circuit between the sawtooth generator and the horizontal deflecting plates. These errors, however, can be compensated to a considerable extent.

In the case of errors introduced by the coupling circuit, improvement can be made by keeping the ratio T/R_1C_1 small, as has already been shown.

There are, however, several methods by which the charging rate of the capacitor can be rendered reasonably uniform, and some of these methods will now be described. In the first method, the basic circuit of which is shown in Fig. 39, the capacitor C is charged partly by the current drawn directly from the *D.C.* source and flowing through R, and partly by a current derived from the amplifier A. This second current is shifted in phase from that of the main charging current by the inclusion of capacitor C_2 in the output circuit of the amplifier.

It is, of course, essential that the amplifier itself shall be free from distortion, and that the time-constants $R_1\,C_1$ and $R_2\,C_2$ are sufficiently high to avoid distortion of the voltage transferred. It is also essential that the output of the amplifier is in phase with the input. This latter requirement necessitates a two-stage amplifier, since a single stage introduces a phase-shift of 180°.

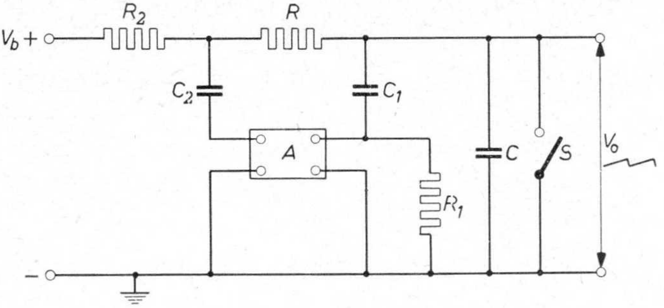

Fig. 39. Basic circuit for improving the linearity of the sawtooth voltage by means of an amplifier "A".

For perfect linearity the gain of the amplifier should be equal to $1 + R/R_1$.

As an alternative, if absolute linearity is not required, a single valve amplifier can be employed, connected as a cathode follower in order to meet the requirement that the output voltage shall be in phase with the input. The basic circuit is given in Fig. 40. The input resistance must also be high. As a practical example, using the pentode Type EF 42 which has a mutual conductance of 9.5 mA/V, and with $R_k = 10\text{k}\Omega$ and $R_1 = 3\ \text{M}\Omega$, it is possible to produce a time base voltage in which the rate of increase at the end of the charge period is only 1.8% less than at the beginning.

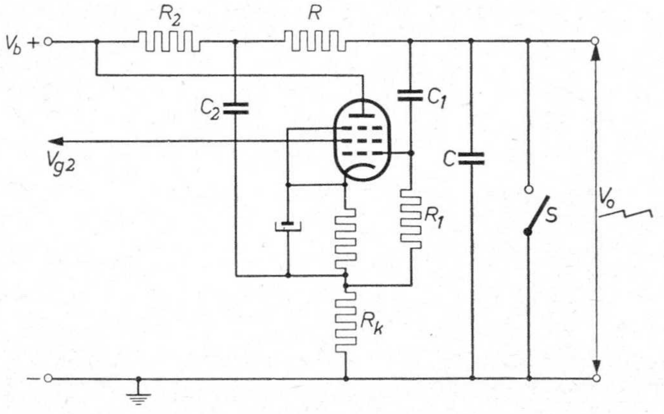

Fig. 40. Circuit for improving linearity of sawtooth voltage using only one valve, connected as a cathode follower.

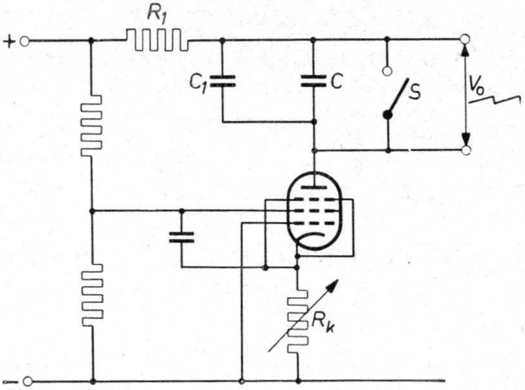

Fig. 41. Use of a pentode as charging resistance in order to improve linearity of the sawtooth voltage.

Another method of linearising the charging rate takes advantage of the fact that, over a large part of its I_a/V_a characteristic, the anode current of a pentode is very nearly constant. By using a pentode instead of the charging resistance R in the basic time base circuits previously described, an almost constant charging current is supplied to the capacitor.

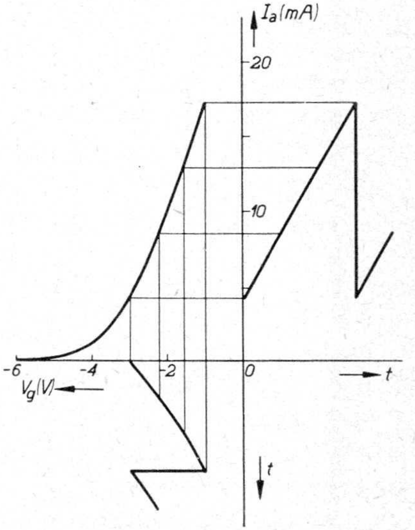

Fig. 42. Improved linearity of time base voltage resulting from the curvature of the I_a/V_g characteristic of the amplifying valve.

A basic circuit showing this arrangement is given in Fig. 41. Perfect linearity cannot be achieved, since the anode current of the pentode naturally decreases more rapidly at low values of V_a, but the total velocity error can be limited to about 4.8% using a pentode Type EF40 under the following conditions: Mutual conductance 1.0 mA/V; $I_a = 1.0$ mA; $R_k = 2.5$ kΩ; $R_1 = 3.0$ MΩ; $R_i = 5$ MΩ; $V_b = 250$ V; and V_c, the voltage to which C is charged = 120 V.

When the sawtooth voltage has to be amplified before it is transferred to the horizontal deflecting plates of the oscilloscope tube, the curvature of the I_a/V_g characteristic of the amplifying valve can be utilised to provide a measure of linearity compensation. Fig. 42 shows the influence of this non-linear characteristic on an input voltage of exponential form. Since the form of the I_a/V_g characteristic is not itself exponential, perfect linearisation is not possible, but the illustration shows that considerable improvement results from the amplifying valve being controlled by a non-linear timebase voltage.

10. Methods of producing a Repeating Time Base Voltage

It has been explained that some form of automatic switch is necessary to discharge the capacitor rapidly at the end of each stroke, and two types of electronic switch for this purpose — a gas diode and a thyratron — have been described, and their limitations noted. While a thyratron permits the design of a very simple time base which can be easily synchronised by pulses of the order of 1 volt, a time base of this type is not suitable for very high sawtooth frequencies, and more satisfactory results are obtained by using vacuum valves as the electronic switch.

One method is to use one additional valve to produce a feed-back effect and the simplest of many variations of this "multi-vibrator" circuit is shown in Fig. 43, which uses a double triode, Type ECC 40. One triode section, V_1, acts as the electronic switch, and the other section, V_2, is the feed-back element. The operation of the circuit is as follows:

At the end of the sawtooth cycle V_1 will be cut off, and capacitor C discharged. Capacitor C now charges via resistor R and the anode potential of V_1 increases until eventually anode current begins to flow and the discharge of C commences. With increasing, anode current in V_1, the voltage drop across the cathode resistor R_k increases, driving the control grid of V_2 more negative so that the anode current of V_2 decreases. This results in an increase

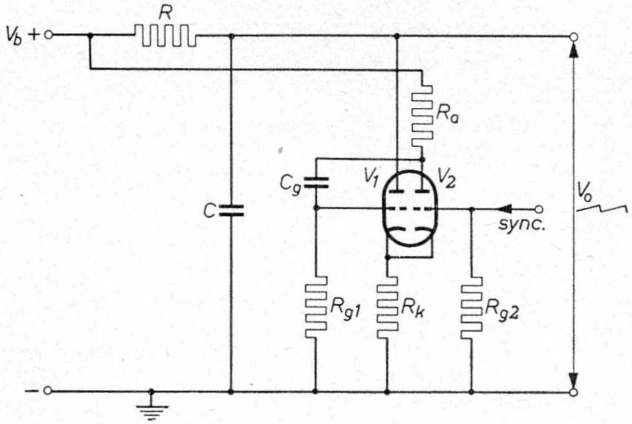

Fig. 43. Time base circuit using a double triode as electronic switch.

of the potential at the anode of V_2, and since this point is directly connected to the control grid of V_1, this electrode is driven increasingly positive, so that the anode current of V_1 rises still further. This process is cumulative so that capacitor C is very rapidly discharged. It should be noted that in order to achieve this effect the increase of grid potential of V_1 must exceed the rise of cathode voltage; in other words the gain of V_2 must be greater than unity. When the potential at the grid of V_1 has become positive with respect to the cathode, grid current starts to flow, charging capacitor C_g in such a sense that the grid is driven negative and V_1 is cut off. The cycle is now completed and commences again. Suitable values for the various components of the circuit reproduced in Fig. 43, using an ECC 40 double triode are:

$R = 100$ to 200 kΩ $R_{g1} = 300$ kΩ
$R_k = 1$ kΩ $R_{g2} = 500$ kΩ
$R_a = 100$ kΩ $V_b = 250$ V

The value of C depends upon the operating frequency required, and is approximately 0.5μF for a frequency of 50 c/s. C_g should be about 1/20 or 1/30 of C. The fly-back ratio will be about 1:20 for frequencies up to 1 kc/s.

As the input capacitance of V_1 is somewhat high, the flyback ratio at higher frequencies is rather poor, and may be as much as 1:5 at frequencies between 10 kc/s and 20 kc/s. The amplitude of the sawtooth output voltage is approximately 30 V, but varies slightly with the value of R. Synchronisation can be

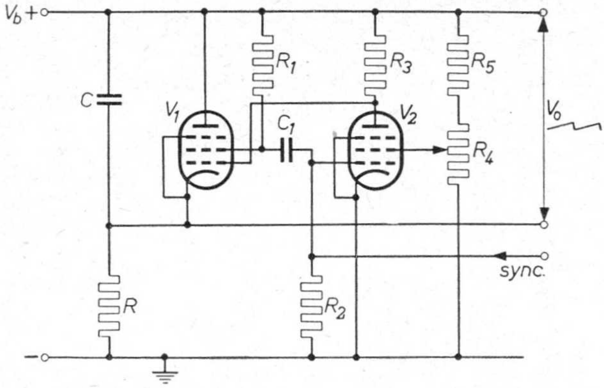

Fig. 44. Time base circuit similar to that of Fig. 42. but employing two pentodes as electronic switch.

achieved by an alternating voltage of about 1 volt and of arbitrary waveform applied to the grid of V_2.

A circuit similar to that in Fig. 43, but using two pentodes instead of triodes is shown in Fig. 44. Owing to the lower input capacitance of the pentode, a much better flyback ratio is obtained. Furthermore, since in this

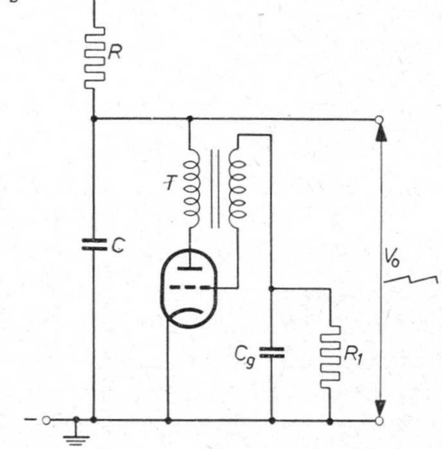

Fig. 45. Basic circuit of blocking oscillator time base generator.

arrangement no coupling capacitor is required between the anode of V_2 and the grid of V_1, the amplitude of the sawtooth voltage is less dependant upon the repetition frequency. Amplitude control is effected by adjusting potentiometer R_4 which varies the screen-grid voltage and hence the anode current of V_2, thus controlling the mean potential of the control grid of V_1, which in turn determines the anode voltage at which V_1 starts to conduct. It should be noted that the cathode of V_1 is at a fairly high positive potential with respect to earth, and its heater should therefore be supplied from a separate winding on the power transformer.

As an alternative to the multi-vibrator type of circuit described above requiring two valves, time bases can be built in which the feedback occurs in the circuit of a single valve. The simplest of these circuits is the blocking oscillator, the basic diagram of which is shown in Fig. 45. Although more particularly suited for generating a sawtooth voltage of one fixed frequency, and therefore not usually employed in oscilloscopes, it is included here for the sake of completeness. The essence of this arrangement is that the primary winding of transformer *T* is connected in the anode circuit of the triode, and the secondary in the grid circuit, in such a way that as the anode potential decreases the grid potential becomes more positive.

The operation of the circuit can best be followed by assuming that the valve is biased well beyond cut-off due to a negative charge on capacitor C_g — how this comes about will become clear later. Capacitor *C* charges from the *HT* supply via *R*, and the voltage across it rises exponentially in the normal manner. At the same time C_g discharges via R_1 so that the grid potential rises. When the grid potential has risen to just about the cut-off value, anode current begins to flow, and the resultant decrease in anode voltage causes a rise in grid voltage due to the feedback via the transformer. The anode current therefore increases, producing a further drop in anode voltage and rise in grid voltage, and the process is cumulative, allowing *C* to discharge rapidly through the valve. Ultimately the grid attains a positive potential, and grid current flows, re-charging C_g in such a direction that the grid is again driven negative, and the valve is cut off. The cycle then recommences.

A somewhat similar arrangement, the squegging oscillator, is shown in Fig. 46, but the coupling between anode and grid is tighter. At the commencement of the cycle the circuit behaves very much like the blocking oscillator,

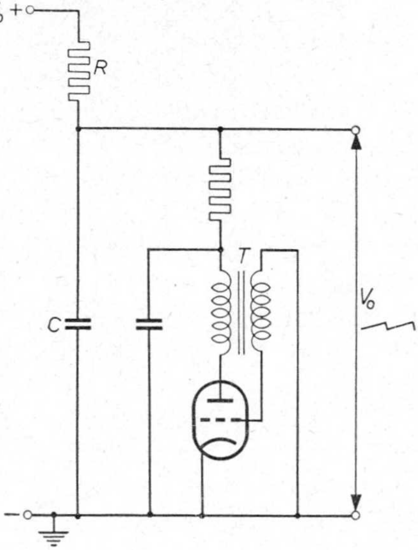

Fig. 46. Basic circuit of squegging oscillator time base generator.

but when the anode current reaches a certain value the circuit starts to oscillate at a high frequency. The oscillations build up to a certain amplitude and then suddenly cease, the repetition frequency of these bursts of oscillation depending upon the circuit constants. A practical circuit of this type is given in Fig. 47. The valve is a double triode Type ECC 40, V_1 being the oscillator and V_2 and its associated circuit serving as a linearising device of the type shown in Fig. 40.

The transformer should be either the primary or secondary coil of a conventional 470 kc/s intermediate frequency transformer wound in two identical halves and with a dust core. The built-in tuning capacitor should be removed, and the connection between the two halves of the coil should be broken. One half of the coil should be connected in the anode circuit and the other in the grid circuit.

If C is made variable in seven steps from 50,000 pF to 150 pF, and the charge resistance ($R_4 + R_5$) variable between 1.4 MΩ and 0.4 MΩ, the frequency range will be from 20 c/s to 20 kc/s.

The amplitude will vary between 54 V and 42 V peak-to-peak over this range of frequency adjustment, and over the control range of the charging

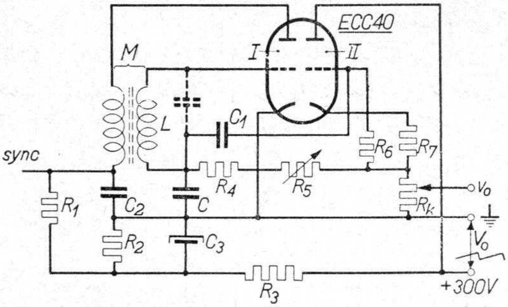

Fig. 47. Practical circuit of a squegging oscillator time base generator, employing an ECC40 double triode. The frequency can be adjusted by varying the capacitance of C and the charge resistance ($R_4 + R_5$). The amplitude is adjustable by means of R_k

$R_1 = 10\ k\Omega$
$R_2 = R_3 = 60\ k\Omega$
$R_4 = 0.4\ M\Omega$
$R_5 = 1.0\ M\Omega$
$R_6 = 2.7\ M\Omega$
$R_7 = 1.0\ M\Omega$
$R_k = 10\ k\Omega$
$C_1 = 0.22\ \mu F$
$C = 390\ pF$
$C_3 = 4\ \mu F$

resistor the flyback ratio will vary between 1 : 40 and 1 : 12 and the velocity error between —8.8 and —5.4%.

Yet another type of time base is the transitron, a basic circuit of which is given in Fig. 48. Its principle can be followed by starting at the instant of switching on, when the capacitor *C* is fully discharged and no anode current passes through the valve. As *C* charges via *R*, the anode voltage rises and the valve starts to pass current. The rise of anode current is accompanied

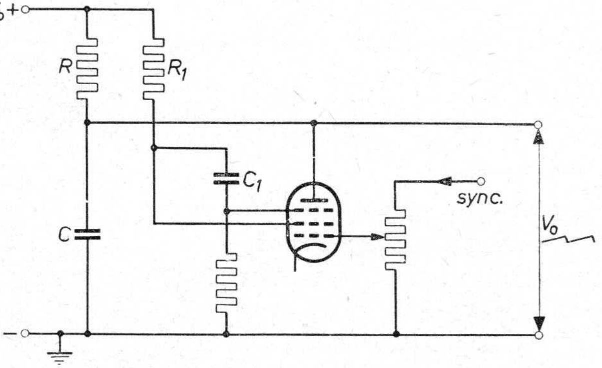

Fig. 48. Basic circuit of transitron time base generator

by a decrease of screen-grid current and a consequent increase of screen-grid voltage whereby C_1 is charged via R_1. Because of this charge on C_1, the suppressor grid assumes a positive potential, with the result that the anode current increases further and the screen-grid current decreases. This process is cumulative so that capacitor C discharges rapidly through the valve. The increase of anode current produces a corresponding decrease of anode voltage. When this voltage falls to a value corresponding to the knee of the I_a/V_a curve the anode current begins to decrease and the screen-grid current to increase. Increase of screen-grid current is accompanied by a decrease of screen-grid voltage so that C_1 discharges, the current through R_1 being at the same time reversed. The discharge of C_1 drives the suppressor grid negative, thus cutting-off the valve, after which the whole cycle recommences.

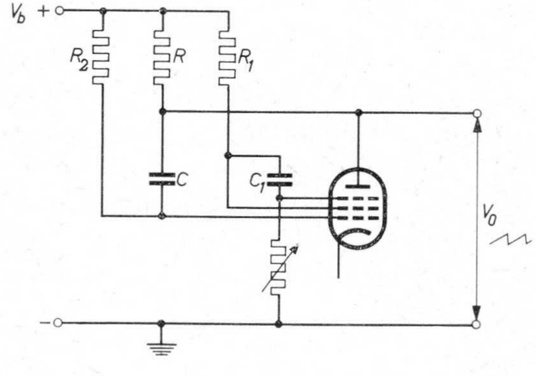

Fig. 49. Miller-Transitron Sawtooth generator

Finally, Fig. 49 shows the basic circuit of a time base known as the Miller-transitron circuit, which differs from the simple transitron in that the capacitor C is now connected between the anode and control grid of the valve instead of between anode and cathode, while the control grid is connected to the H.T. + line via a high resistance (R 2) of the order of 2 M Ω.

Due to the position of capacitor C, there is heavy feedback between the anode and grid circuits. This is the well-known "Miller" effect, and one of its results is that for a given value of charging current, a given voltage across the capacitor can be obtained with a much smaller capacitor than in the simple transitron.

11. Single-Stroke Time Bases

Hitherto, only repeating time base generators have been considered. For the examination of non-recurrent phenomena a time base is required the stroke of which can be started by an impulse provided from the phenomenon to be examined, and which will give only a single stroke. Such a time base can often be produced by modifying the circuit of a normal repeating time base. For many applications, however, it is preferable to employ photographic recording, in which only vertical deflection due to the phenomenon under examination is employed, the horizontal sweep being obtained by movement of the film itself.

12. Circular, Spiral and Radial Time Bases

In a limited number of applications, considerable advantages accrue if the time scale of the oscilloscope is not horizontal, but is of circular, spiral or radial form.

If two sinusoidal voltages of identical frequency and amplitude, but with a phase difference of 90°, are applied to the two sets of deflecting plates, a circular trace will appear on the screen and the peripheral velocity of the spot will be uniform. In this case both sets of deflector plates are utilised for producing the time base, and the potential to be examined is used to modulate the circumference of the trace.

If, by means of a sawtooth voltage, the amplitude of the two voltages producing a circular time base is controlled, the trace will be of spiral from, and thus gives a very long time-scale. In order to ensure that this spiral is stationary and not rotating, the time period of the controlling sawtooth voltage must be a complete multiple of that of the circular trace.

If the period of the circular trace is made very large compared with that of the sawtooth controlling voltage, the form of the trace changes from spiral to radial, thus giving a still longer time scale.

When using this type of time base it is customary to apply the voltage to be examined to the grid of the cathode ray tube. The indication then consists of variations in the brightness of the trace.

CHAPTER IV

AMPLIFIERS FOR VERTICAL DEFLECTION AND PICK-UPS FOR CONVERTING NON-ELECTRICAL PHENOMENA INTO ELECTRICAL MAGNITUDES

In the data on standard oscilloscope tubes given in Chapter VII values are quoted for what is termed the "deflection" sensitivity. The deflection sensitivity is defined as the distance through which the spot moves on the screen when the voltage applied between a pair of deflecting plates is varied by 1 volt. It will be seen from Chapter VII that the deflection sensitivity is in the order of 0.25 mm. per volt. This means that in order to obtain a good readable deflection very considerable voltages must be applied between the deflecting plates. For example, a vertical deflecting voltage of 40 volts peak-to-peak is required to obtain a trace only 1 cm in overall height.

A trace with a maximum amplitude of only 1 cm is not very convenient, and for accurate measurement or examination a considerably larger display is necessary so that, for most purposes, a voltage of one or two hundred volts peak-to-peak must be applied between the plates for vertical deflection.

It does not usually happen that voltages of this order are directly obtainable from the phenomenon under investigation; indeed, the "signal" voltage is often quite small, and may even be in the order of a few millivolts only. It is therefore necessary to magnify the voltage to be examined, and this is done by introducing an amplifier between the signal source and the plates for vertical deflection.

1. Amplifiers for Vertical Deflection Voltages

The requirements which the amplifier for the vertical deflecting voltage must fulfil are in many ways much more exacting than those met with in most other branches of applied electronics. Before dealing in a general way with the basic circuit features of an amplifier for the vertical deflection voltage, therefore, it will be useful to indicate some of the main properties which such an amplifier should possess.

One of the most important advantages of the cathode ray tube is that, in itself, when operating conditions are correctly selected and maintained, it is a measuring device of high precision, that is to say the trace on the screen is a very faithful representation of the voltage variations applied to the deflecting system. In order to take full advantage of this precision, therefore, it is a first requirement that any amplifier interposed between the signal source and the deflecting plates should introduce the minimum of distortion.

Another advantage of the cathode ray tube is that, in itself, it imposes a very small load on the signal source, that is to say it draws very little power from the source. An amplifier for the vertical deflection voltage should maintain this advantage; in order to do so it should have a high value of input impedance.

The third requirement is that the output stage of the amplifier shall be of a type suitable for the particular cathode ray tube with which it will be used. The relative merits of symmetrical and asymmetrical deflection voltages have been discussed at some length in Chapter II, in which it was explained that, generally speaking, symmetrical drive is desirable for the vertical deflection system, although there are some tubes which are specially designed to operate satisfactorily when the horizontal deflecting voltage is asymmetrically applied. For symmetrical deflection a push-pull output stage is necessary. This, while adding somewhat to the cost of the amplifier, does not present any major technical difficulty.

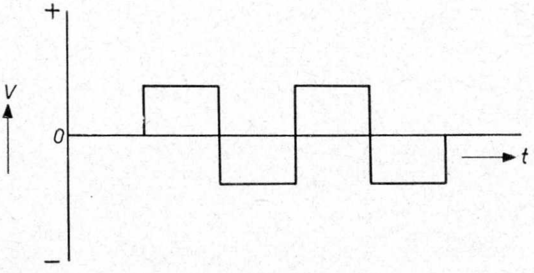

Fig. 50. Square waveform

The last, but certainly not the least important requirement that must be met by an amplifier for the vertical deflection voltage, is concerned with the frequency band over which the amplifier can operate without serious distortion. An oscilloscope should be capable of depicting faithfully a voltage of any waveform, however complex. One of the most complex of waveforms — although apparently simple in geometrical shape — is the square wave such as is depicted in Fig. 50. Such a waveform, if analysed mathematically, is found to be compounded of a sine wave of the fundamental frequency, plus a large number of harmonics, that is to say sine waves having frequencies which are multiples of the fundamental frequency. In order to reproduce a square wave faithfully, the amplifier must have a level response curve for all frequencies up to at least the tenth harmonic of the highest fundamental frequency with which the oscilloscope will be expected to deal, and preferably up to the twentieth harmonic. Methods of ensuring this are described in one of the following paragraphs dealing with the subject of distortion.

1.1. WHAT IS DISTORTION?

Since a prime consideration in the design of an amplifier for vertical deflection is the avoidance of distortion, it may be useful at this point to consider what, in effect, constitutes distortion. The term "distortion" in its widest sense connotes any departure, in the output waveform, from the waveform of the original signal. There are a number of different types of distortion, the most important of which are defined below.

1.2. AMPLITUDE DISTORTION

In normal audio-frequency practice the word "distortion" by itself is often used to indicate what the engineer terms "amplitude distortion", by which is meant that input voltages of different amplitudes are not magnified equally. This form of distortion is mainly due to the curvature of the characteristic of the amplifying valve or valves. An example, considerably exaggerated for the sake of clearness, is given in Fig. 51. Here it is seen that an input signal having a peak-to-peak value of 0.4 volt produces a change of anode current having a peak-to-peak value of 1.2 milliamperes. In a distortion-free amplifier, an input voltage having three times the amplitude, namely 1.2 volts peak-to-peak would produce a current change of 3 x 1.2 milliamperes, or 3.6 milliamperes peak-to-peak. Is is seen, however, that in fact, due to the non-linearity of the valve characteristic, the peak-to-peak value is only 3.3 milliamperes. In other words, amplitude distortion has occurred, and the amount of this distortion is

$$\frac{3.6 - 3.3}{3.6} \text{ x } 100 = \frac{.3}{3.6} \text{ x } 100 = 8.3\%.$$

It will be agreed that this distortion amounts to a change in the waveform, this particular example resulting from the fact that, for a large signal, the positive-going halfcycles are amplified to a greater degree than the negative-going half-cycles.

By correctly biasing the amplifying valve and by limiting the peak amplitude of the input signal to a value which, at the working point, subtends a substantially linear portion of the valve characteristic, simple ampliude distortion in the valve can be almost completely avoided. The design calculations to ensure this are well known, and need no further mention here.

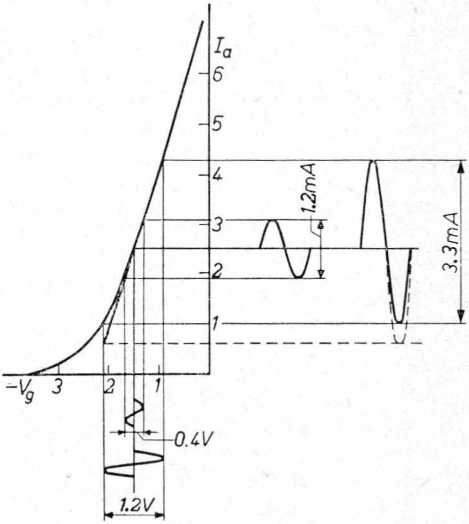

Fig. 51. Amplitude distortion due to non-linearity of valve characteristics

1.3. FREQUENCY DISTORTION

A much more serious form of distortion, because it is more difficult to avoid or to correct, is that known as "frequency distortion", by which is meant that input voltages of different frequencies are not amplified to the same degree. The term "frequency distortion" is not a very happy one, for it is not the frequency itself which is distorted but the waveform. It is, in effect, a special case of amplitude distortion, which is dependent upon the frequency of the signal, and it might, therefore, be well termed "frequency-dependent amplitude distortion".

This form of distortion arises mainly from the fact that the circuit of an amplifier includes a number of elements possessing capacitance, and that the reactance of a capacitor is not constant but varies with frequency. This can be explained by reference to Fig. 52, which shows at *A* the basic circuit of a resistance-capacitance coupled amplifier, and at *B* the equivalent circuit from the point of view of the amplified signal.

In this figure, R_a is the anode load of valve V_1. The amplified signal voltage appearing across R_a is transferred to the grid circuit of V_2 via the coupling capacitor *C*. R_g is the grid resistor of V_2. In the equivalent circuit *B*, a further capacitor. C_a is shown in dotted line, in parallel with R_a. C_a represents the combined value of the output capacitance of V_1, the input capacitance of V_2 and the various stray capacitances due to the valve holder and circuit wiring.

By suitable choice of valves and components, and care in the layout of the wiring, C_a can be kept quite small, and its reactance, which is equal to $1/2\pi fC_a$ (where f = frequency and C_a is in farads) will be fairly high at low frequen-

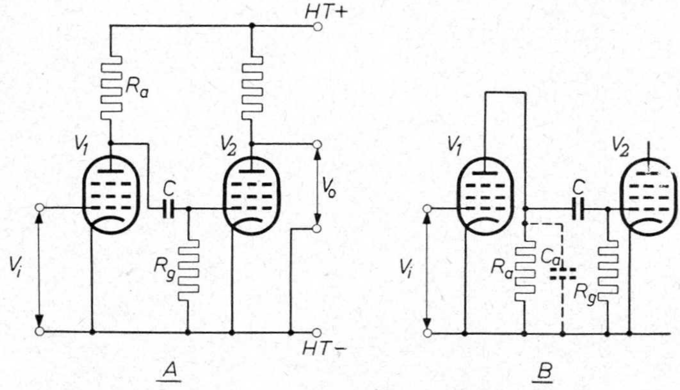

Fig. 52. A — Basic circuit of RC coupled amplifier, B — Equivalent circuit

R_a = *Anode load of* V_1

R_g = *Grid resistor of* V_2

C = Coupling capacitor

C_a = *Effective capacitance shunting* R_a

cies. The impedance of the combination of R_a and C_a in parallel will therefore not differ greatly at low frequency from the resistance of R_a, and the gain of V_1 will be a close approximation to that calculated on the basis of a load equal to R_a.

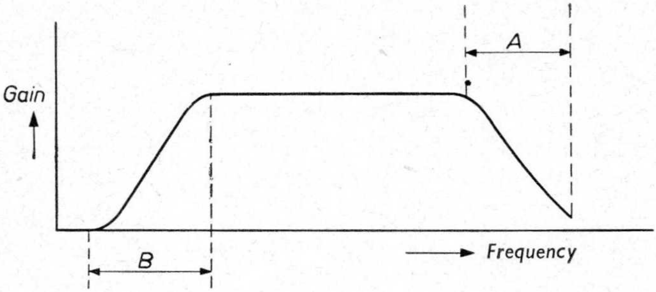

Fig. 53. General form of response curve of an RC coupled amplifier

With increasing frequency, however, the reactance of C_a decreases, so that the effective anode load of V_1, which is represented by the parallel connection of R_a and C_a, becomes smaller, and the gain correspondingly less.

There is a similar variation in gain over the lower range of frequencies, but in this case the cause is the variation of the reactance of the coupling capacitor C in Fig. 52. The explanation is that the signal voltage as amplified by V_1 and appearing across R_a, is effectively applied across C and R_g in series, and it is only that part of the voltage which appears across R_g which forms the input to V_2.

At high frequencies the reactance of C is but small, and practically the whole of the available voltage appears across R_g and is amplified by V_2. At low frequencies, however, the reactance of C is greater, and the proportion of the total voltage which appears across R_g is therefore smaller. Valve V_2 therefore receives a smaller input, and the overall gain of the amplifier at low frequencies is smaller.

It has thus been shown that the general form of the response curve of the amplifier, i.e. gain plotted against frequency, is as indicated in Fig. 53, and shows a drop of gain at the high frequency end of the waveband (A) and a drop of gain at the low frequency end of the waveband (B). In view of the necessity of so designing the amplifier that it has a substantially level response over a wide range of frequencies, steps must be taken to reduce the inherent tendency to attenuation of the upper and lower frequencies, and also to provide compensation for such attenuation as cannot be avoided.

The loss of gain at the high frequency end can be reduced to some extent by operating the valves with a value of anode load, R_a, considerably smaller than that normally employed. In these circumstances the shunting effect of C_a in Fig. 52 is not so marked since its reactance, even at high frequencies, is large compared with R_a. This improvement, however, is achieved only at some sacrifice of overall gain due to the small value of the anode load, and this often necessitates additional amplifying stages. This reduction of overall gain resulting from operation with comparatively low anode load can be minimised to some extent by employing high-slope pentodes, which give a reasonable stage gain at comparatively small values of anode load.

Compensation for the drop in gain at the high frequency end of the waveband can be applied in a number of ways. For example, part of the anode load may be made inductive, as shown in Fig. 54, the inductive component being so chosen that it resonates with C_a at a frequency near to that at which the drop in gain occurs.

Another method is to arrange that negative feedback is applied to the amplifier at low frequencies, thus reducing the gain, while at high frequencies the feedback is inconsiderable and the full amplification is available. This can be achieved by choosing a small value for the by-pass capacitor to the cathode resistor.

A third device is to reduce the effect of the stray capacitance to earth by applying *positive* feedback from the output of one stage to the anode of the

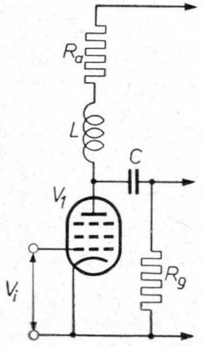

Fig. 54. Compensation for attenuation of high frequencies by making part of the anode load inductive

R_a = *Resistive portion of anode load*
L = *Inductive portion of anode load*
C = *Coupling capacitor*
R_g = *Grid resistor of following valve*

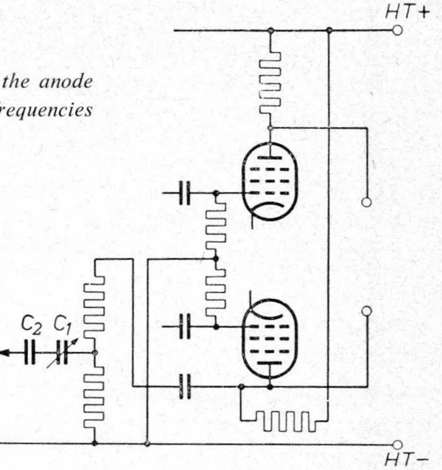

Fig. 55. By applying positive feedback to the anode of the previous stage the attenuation of high frequencies can be reduced

previous stage. An example of this is given in Fig. 55 which shows part of the circuit of a vertical deflection amplifier with push-pull output. The positive feedback is taken from the anode of the appropriate valve of the push-pull pair and is applied to the anode of the previous valve via a very small capacitance consisting of C_1 and C_2 in series. Yet another method of compensating for the drop in gain at high frequencies is to introduce a cathode follower between two normal amplifying stages, and possibly also as the input valve of the amplifier. The basic circuit of a cathode follower stage is indicated in Fig. 56 in which V_1 is the cathode follower and V_2 a normal amplifier. In the cathode follower the output is taken from a load in the cathode circuit instead of from the anode circuit. This results in very heavy negative feedback

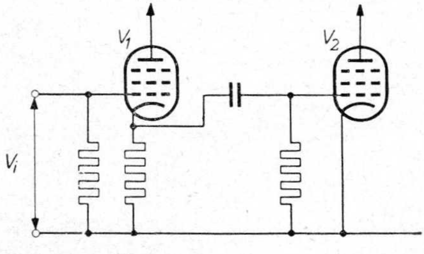

Fig. 56. Basic circuit of valve V_1 connected as a cathode follower

being applied to the valve, which therefore has a very low output impedance. The shunting effect of the comparatively low input impedance of V_2 at high frequencies thus has no significant effect. Although, due to the almost 100% feedback, the gain of the cathode follower is always less then unity, it does ensure correct impedance matching between stages over a very wide range of frequencies.

Compensation for drop in gain at the low frequency end of the waveband can be achieved in a number of ways, of which the most simple is by shunting a part of R_a by a capacitor as shown in Fig. 57. At low frequencies the reactance of the capacitor is high and its shunting effect therefore small, so that the effective load impedance is not sensibly less than the value of R_a and maximum gain is obtained. With increasing frequency, however, the reactance of the capacitor decreases, and the effective load impedance is smaller so that the gain is reduced.

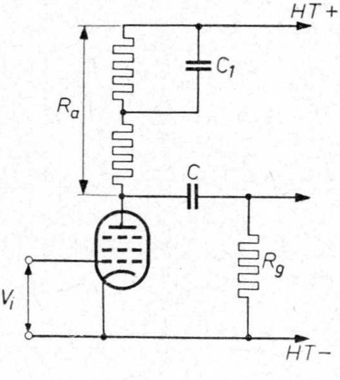

Fig. 57. Compensation for attenuation of low frequencies by shunting part of the anode load with a capacitor.

R_a = *Anode load*
C_1 = *Compensating capacitor*
C = *Coupling capacitor*
R_g = *Grid resistor of following valve*

1.4. PHASE DISTORTION

Phase distortion is the effect in which, when a signal of complex waveform is applied to the input of an amplifier, the wave form of the amplified signal differs from that of the input by reason of a change in the phase relation between the various component frequencies. This is due to the fact that, in an amplifier incorporating resistance-capacitance coupling networks, the transit times of different frequencies through the amplifier are not equal so that phase shift occurs.

This is illustrated in Fig. 58. In the left-hand graph the full line represents

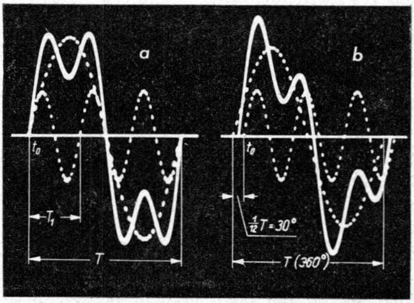

Fig. 58. Distostion of a composite AC voltage due to a CR network.
a) Sum voltage curve (full) and its components (dotted) in the starting position (fundamental and harmonic in phase).
b) Distortion due to phase shift in a CR network

a complex waveform which, on analysis, can be shown to consist of a fundamental sine wave and its third harmonic, these components being indicated in broken line. The right-hand graph shows how these two components appear in the output of an amplifier in which phase-shift occurs, and it is seen that there is a phase difference (in this case 30°) between them. If these two components are combined into a single resultant wave as indicated in full line, it is seen that considerable distortion has been introduced.

Phase distortion is not usually very considerable in the case of low frequency inputs, but is likely to be serious at higher frequencies. Since one of the most important applications of the oscilloscope is to present a faithful trace of a waveform under examination, phase distortion is the most serious form of distortion in vertical deflection amplifiers. Since phase distortion is occasioned by the same circuit elements as those which produce frequency distortion, any steps taken to reduce the latter will also effect improvement in respect of phase distortion.

An attempt has been made in the foregoing paragraphs to indicate the principal characteristics which a vertical deflection amplifier should possess, and to outline some of the methods whereby these characteristics may be achieved. The design of an actual amplifier involves complex mathematical calculations and also the application of judicious compromise, so no instructions for undertaking a complete design have been given. In the final chapter of this book, however, a number of typical oscilloscope circuits are described, and these incorporate some, at least, of the circuit devices already discussed.

2. Conversion of Non-electrical Phenomena into Electrical Magnitudes

The cathode ray oscilloscope is essentially a sensitive galvanometer, and can therefore be used directly to measure or examine only electrical magnitudes, which must be applied as voltages between the deflection plates. For the examination of non-electrical phenomena it is necessary to employ some form of "pick-up" which converts the phenomena into electrical magnitudes.

A great deal of ingenuity has been displayed from time to time in devising methods of conversion, some of which involve several intermediate conversions. Some of the principal forms of pick-up suitable for the more usual conversion operations are briefly described below. Examples of practical applications are dealt with in somewhat greater detail in Chapter VI.

2.1. RESISTANCE PICKUPS

Many non-electrical phenomena can be made to change the resistance of a suitable circuit component, and thus to change the current through the circuit of which the resistor forms a part or, what amounts to the same thing, to change the voltage drop across the resistor. This change can then be displayed on the oscilloscope screen. Resistance pick-ups are of several types, of which the following are the most important.

(a) *Compression type Resistors.* In these units, variation of physical dimensions, of position, or of mechanical pressure cause corresponding variations of resistance. A typical example is the familiar carbon microphone.

(b) *Temperature-sensitive Resistors.* The change in resistivity which most conductors undergo with change of temperature can be exploited to form the basis of one type of pick-up for use in applications where it is required to measure variations of temperature. Both resistors having a positive temperature coefficient of resistance (i.e. those whose resistance increases with rise of temperature) and those having a negative temperature coefficient of resistance (e.g. "thermistors" whose resistance decreases with rise of temperature) can be used in this way.

(c) *Strain Gauges.* These consist of fine wires, usually mounted on paper strips, cemented on to the surface of a mechanical specimen in such a way that any deformation of the specimen due to mechanical stress causes elongation of the wire with corresponding reduction of cross section, both of which result in increase of resistance. Strain gauges can therefore be used for displaying change of dimensions under stress, and for measurements of weight.

2.2. PIEZO-ELECTRIC PICKUPS

When mechanical pressure is applied between a pair of opposite faces of certain crystals, notably quartz and tourmaline, a potential difference is set up between another pair of opposite faces of the crystal, and is proportional to the applied pressure. This potential difference can be amplified and applied to the vertical deflection plates of the oscilloscope, thus displaying on the screen a representation of the variation of mechanical pressure.

2.3. CAPACITANCE PICKUPS

Variations of mechanical pressure, of position, or of physical dimensions can be made to vary the distance between the plates of a small capacitor, and thus to vary its capacitance. The capacitor can be connected in an electric circuit in such a way that the variation of capacitance varies either the frequency or the amplitude of electrical oscillations, and this can be displayed on the luminescent screen.

2.4. ELECTRO-MAGNETIC PICKUPS

Variations of physical dimensions, of position or of mechanical pressure can be made to alter the configuration of a system containing an inductive element. Such a system might consist of a coil and a core or armature of magnetic material, or two mutually movable coils, or some similar combination.

There are two general types of electro-magnetic pickup. In the first, the mechanical phenomenon merely varies the inductance, and therefore the reactance, of the electrical system, and these variations can be caused to vary either the frequency or amplitude of electrical oscillations. In the second type, mechanical movement or vibration can be caused to vary the position of a soft iron armature with respect to a coil having a magnetised core. The movement of the armature then induces an E.M.F. in the coil, and this, when amplified, can be applied to the deflection plates of the oscilloscope.

2.5. THERMO-ELECTRIC PICKUPS

The familiar thermo-couple thermometer may be used to convert change of temperature into an electrical voltage for display on the oscilloscope screen. In this device, two junctions of dissimilar metals are connected is series, one junction being maintained at a constant temperature and the other exposed to the temperature it is desired to measure. An E.M.F. is set up in the circuit and is proportional to the difference between the temperatures at the two junctions. This E.M.F., if necessary suitably amplified, can be applied to the deflecting plates of the oscilloscope tube.

2.6. PHOTO-ELECTRIC PICKUPS

Any of the three forms of photocell can be used to convert light into an electrical magnitude. These three types are:

(a) *Photo-conductive cells*, the resistance of which varies in accordance with the amount and wavelength of the light falling upon them.

(b) *Photo-voltaic cells*, which generate an E.M.F. when irradiated with light.

(c) *Photo-emissive cells*, the cathodes of which emit free electrons when light falls upon them.

These cells can be used directly for measurements of light intensity and colour, and are also employed as an intermediate stage in the examination of other non-electric phenomena such as changes of physical dimensions or position, mechanical vibration etc. In these applications the phenomenon under examination is made to vary the area of an aperture through which light passes on to the photocell, and the electrical variations so produced are amplified and applied to the deflecting system of the oscilloscope.

CHAPTER V

POWER SUPPLY FOR CATHODE RAY OSCILLOSCOPES

The power supply arrangements in a cathode ray oscilloscope have to provide the following supplies:

(1) Heater current for the valves comprising the time base and the amplifier for vertical deflection.
(2) High tension supply for all the valves in the time base and amplifier.
(3) Heater current for the cathode ray tube.
(4) E.H.T. supply to provide the various potentials to the electrodes of the cathode ray tube.

It will be convenient to deal with these supplies in two groups, combining (1) and (2) above to form one unit, and (3) and (4) to form a second unit. Indeed, it is sometimes desirable to construct the equipment as two separate units.

1. The High Tension Unit

The power supply for the time base and amplifier may be termed the "high tension" supply, to distinguish it from the "E.H.T." supply for the cathode ray tube itself. Its design is usually of quite conventional type. Knowledge of the total heater current taken by all the valves in the time base and amplifier enables the output of the 6.3 volt heater winding to be calculated. There must also be an additional heater winding for the rectifier valve.

For the H.T. supply an output equal to the sum of all the anode currents and screen grid currents of the valves in the time base and amplifier will be required, at a voltage of, say, 300 volts. Very good smoothing should be

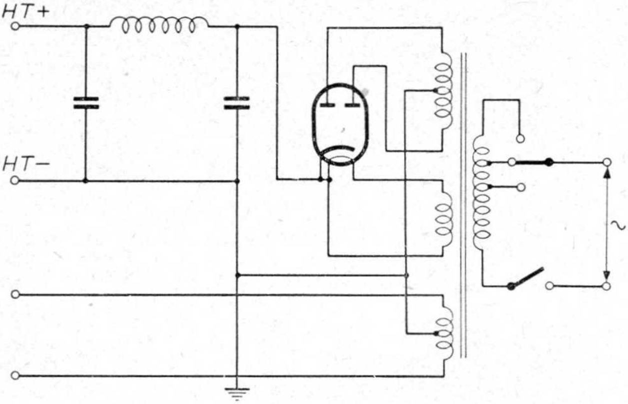

Fig. 59. Basic circuit of H.T. unit for oscilloscope

incorporated in order to keep the ripple voltage on the H.T. supply not greater than 0.5 volt peak-to-peak.

Design considerations for such a unit are well known, and the design itself should present no difficulties. No specific design is given in this chapter, but details of typical units will be found among the circuits of complete oscilloscopes given in Chapter VIII. A basic circuit, however, is shown in Fig. 59.

A full-wave rectifier valve will, of course, be employed, and a suitable type is the EZ80, a modern miniature rectifier on the Noval nine-pin base. This valve has an indirectly-heated cathode, the heater current being 0.6 ampere at 6.3 volts. The EZ80 is rated for a maximum rectified output of 90 milliamperes, and should be operated in conjunction with a reservoir capacitance of 50μF. A limiting resistor should be included in series with each anode in order to avoid overloading in the event of a fault or short-circuit.

Typical operating conditions for the EZ80 are tabulated below: —

Anode voltage (r.m.s.)	2x250	2x275	2x300	2x350 V
Resevoir capacitance	50	50	50	50 μF
Limiting resistor (each anode)	125	175	215	300 Ω
Rectified current	90	90	90	90 mA
Output voltage	265	285	310	360 V

Regulation curves corresponding to these working conditions are reproduced in Fig. 60. If a larger rectified output is required, type GZ32 rectifier

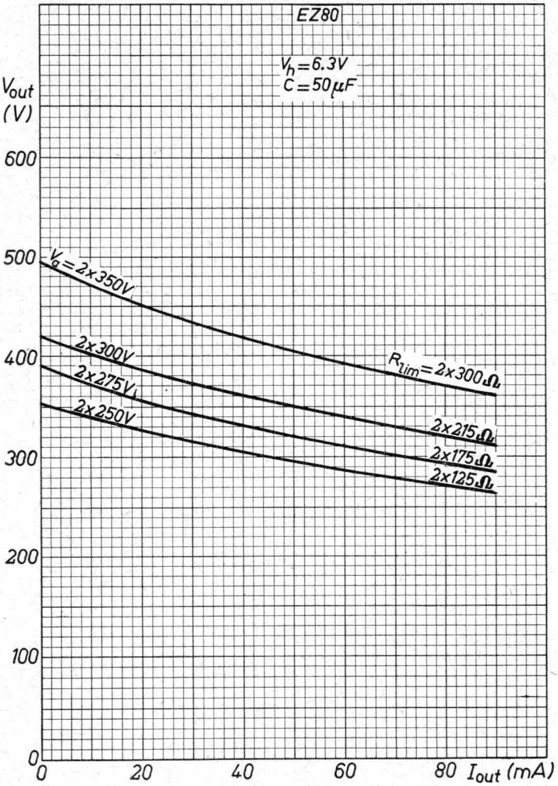

Fig. 60. Regulation curves for EZ80 full-wave rectifier

may be employed. This is a full-wave rectifier with indirectly-heated cathode, the heater rating being 2.3 amperes at 5.0 volts. This valve is on the Octal base. Performance curves for a variety of operating conditions are given in Fig. 61.

2. The E.H.T. Unit

The data of standard ocsilloscope tubes given in Chapter VII indicates that, for the smaller tubes up to 7 cm screen diameter, an E.H.T. supply at about 800 to 1,000 volts is required for normal applications, while for the larger tubes the E.H.T. potential required ranges from, say, 2,000 volts to 5,000 volts according to whether post deflection acceleration is or is not applied.

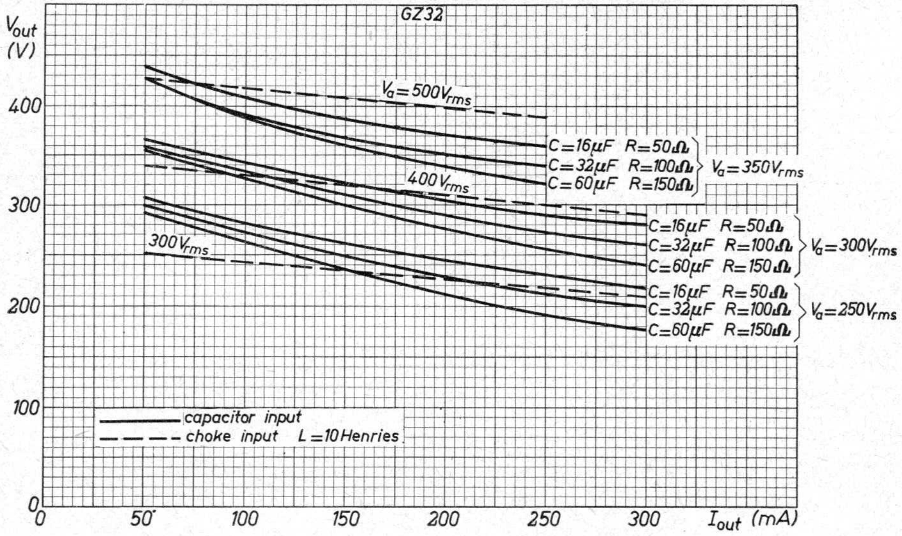

Fig. 61. Performance curves for GZ32 full-wave rectifier

This in itself imposes on the E.H.T. supply unit requirements very different from those applicable to the H.T. unit.

There are, however, several other points of difference. In the first place, the current drawn by the cathode ray tube itself is quite small — in the order of a few tenths of a milliampere. But since the potentials for the various tube electrodes are taken from a potentiometer connected across the E.H.T. supply, the standing current of this potentiometer must also be taken into consideration, and a figure of about 3 milliamperes may be taken as the normal total E.H.T. loading.

Normally a suitable half-wave rectifier valve is employed, in conjunction with a simple resistance-capacitance smoothing netwerk.

The simple basic circuit for an E.H.T. supply unit is shown in Fig. 62. No component values are given here, for these depend upon the cathode ray tube employed and the E.H.T. voltage required. Some typical designs, with component values, will be found in the various circuits for complete oscilloscopes reproduced in Chapter VIII. The following general remarks should, however, be kept in mind:

Since the output of the E.H.T. unit is quite small, the rectified E.H.T.

voltage available will be approximately $\sqrt{2}$ times (1.414 times) the r.m.s. value of the alternating voltage applied to the rectifier valve. This enables the ratio of the mains transformer to be calculated. For example, a transformer secondary winding designed to produce a voltage of 700 volts r.m.s. will result in a rectified voltage of approximately 1,000 volts prior to smoothing.

A suitable winding to provide the heater current for the rectifier valve must be provided on the mains transformer, and also an additional winding to supply the heater of the cathode ray tube. This latter winding must be particularly well insulated from the transformer core and from the other windings, because it is normal practice to earth the positive terminal of the E.H.T. supply so that the cathode and heater of the cathode ray tube are at a high negative potential with respect to earth practically equal to the full E.H.T. voltage.

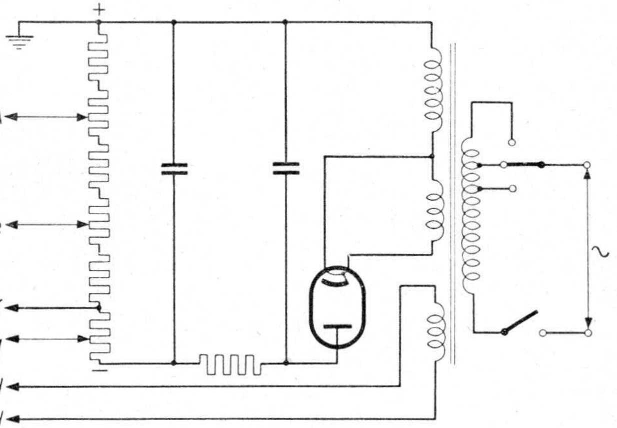

Fig. 62. Basic circuit of E.H.T. unit for oscilloscope

A suitable high voltage rectifier valve for use in the E.H.T. supply unit is Type EY51. This is a half-wave rectifier with indirectly-heated cathode. The heater, which is internally connected to the cathode, is rated at 90 milliamperes at 6.3 volts. In order to avoid overloading the heater, with consequent risk of damage not only to the heater but also to the cathode, care should be taken in designing and building the transformer to ensure that the nominal heater voltage is not exceeded.

The EY51 is a miniature all-glass valve with flying leads instead of pin connections, so that the valve may be directly soldered to the wiring of the unit. There are two leads at the lower end of the valve for the heater connections, one of which is also the cathode connection. The anode lead is at the top of the valve. Care must be exercised when soldering the valve into the unit, the anode lead being soldered not closer than 10 mm. from the bulb, and the heater lead not closer than 5 mm. Great care should also be taken not to bend the anode lead near the point at which it is sealed into the bulb.

3. General Hints

As previously mentioned, it is often desirable to design the power supply for an oscilloscope as two separate units, the H.T. supply being mounted on a sub-chassis within the complete instrument, or even as an entirely separate piece of apparatus in its own case. The latter arrangement is often preferred by amateurs and experimenters, and also in laboratories, schools and technical colleges, as it allows the power unit, which is a useful piece of apparatus in itself, to be used on occasion for other purposes. The E.H.T. unit, however, is usually incorporated in the cathode ray tube unit.

In view of the high potentials involved, great care must be exercised in the matter of insulation, particularly in connection with the E.H.T. unit.

Another important point is the avoidance of stray magnetic fields from the mains transformers. Such fields, should they penetrate into the cathode ray tube, are likely to cause interference with the deflection of the beam, and may possibly also affect focus. The mains transformers should therefore be of good design, having very small magnetic leakage. It is possible to reduce the effect of stray magnetic fields by locating and orientating the transformers in such a way that the stray field does not enter the cathode ray tube, or does not enter the tube at an unfavourable angle. For example, the E.H.T. transformer may be located behind the tube and turned so that the direction of any stray field is along the axis of the tube.

The most satisfactory method, however, is to screen the transformer from the cathode ray tube, preferably with mu-metal screens. These screens may be fabricated from sheet metal or, as is often the practice in professional oscilloscopes, the cone and neck of the tube may be enclosed in a mu-metal funnel the contour of which matches that of the tube.

CHAPTER VI

PRACTICAL APPLICATIONS OF THE OSCILLOSCOPE

In Chapter II mention was made of the principal kinds of examinations and measurements for which the cathode ray oscilloscope may be employed, and these were briefly classified as follows:

1. Measurement of a single magnitude.
2. Examination of the relationship between two magnitudes.
    (a) When one of the magnitudes is time,
        (i) periodic or recurrent phenomena
        (ii) non-recurrent phenomena.
    (b) When neither of the magnitudes is time.

In Chapter IV it was emphasised that, in itself, a cathode ray oscilloscope can measure or display only electrical magnitudes, and a number of typical "pick-up" devices for converting non-electrical phenomena into electrical magnitudes were described.

From these earlier references to the uses of the oscilloscope it will have become clear that the instrument is a most valuable tool, and has a wide range of application, embracing almost every branch of industrial activity and scientific research. Among the many fields of application may be mentioned the measurements required during the design, testing and servicing of electrical equipment, and particularly electronic equipment; the investigation of mechanical problems and the examination and testing of materials in the engineering industries; and measurements and investigations in many branches of physiology and neurology.

It would be impossible, in a book of this size, to attempt even to catalogue all known applications of the cathode ray oscilloscope, while to describe them all many volumes would be required. In this chapter, therefore, only a brief description of a few typical examples in some of the principal fields will be given, the selection being confined, in the main, to applications most likely to be of interest to those for whom the book is primarily intended, namely the student, the amateur constructor and experimenter, and the industrial technician. Some of the examples will be quite simple, and are included mainly as practical exercises to give the student some experience in the use of the instrument. The notes do not, in most cases, set out to give complete instructions for conducting particular investigations, only the general principles being described. For more detailed instructions the reader is referred to the many specialised books and articles on the subject.

The simplest type of application is the use of the oscilloscope for measuring simple quantities such as voltage, current and resistance. This method is of little practical value, since any well-equipped laboratory or test room will contain a range of amperemeters, voltmeters and ohm-meters of conventional type. Even measurement of capacitance, inductance and reactance, all of which are possible with an oscilloscope, are seldom undertaken, as suitable direct-reading instruments are usually available.

These simple measurements do, however, provide useful exercises, and a few are therefore included here. They also serve to emphasise the fact that the oscilloscope is, in reality, only a very sensitive and accurate voltmeter, the size and shape of the display on the screen being determined solely by the values, waveforms and frequencies of the voltages applied to the deflecting system.

1. Calibrating the Oscilloscope

Before using an oscilloscope for quantitative measurements it is necessary to calibrate it so that the deflections can be read directly in suitable units, or are readily translated into the required units. For this purpose it is not sufficient to measure the deflection in, say, millimetres and then to calculate the corresponding electrical value by using the figures for deflection sensitivity quoted by the tube makers. These sensitivity figures, which are expressed in terms of the amount of deflection in millimetres per volt of deflecting E.M.F., are nominal values only, and vary slightly from tube to tube, and also depend upon the E.H.T. voltage applied to the anode of the tube, reduction of this voltage below the specified value resulting in an increase of

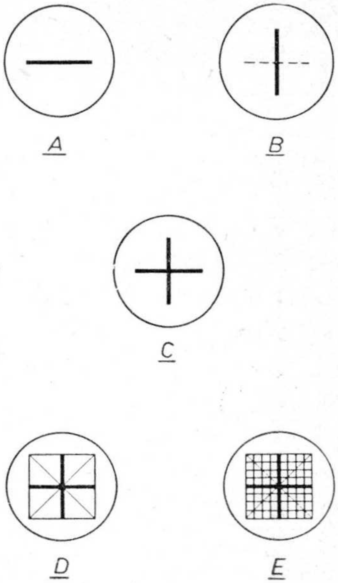

Fig. 63.

A — Trace of a sinusoidal voltage applied to the horizontal deflection plates

B — Trace of a sinusoidal voltage applied to the vertical deflection plates

C — Horizontal and vertical axes of calibration scale

D — Axes and outer frame of calibration scale

E — Completed calibration scale

deflection sensitivity, and increase of E.H.T. voltage resulting in reduced sensitivity.

The following is the conventional method for calibrating an oscilloscope:

1. Disconnect or switch off the time base (horizontal deflecting voltage).

2. Apply an alternating voltage of known value between the plates for horizontal deflection. This voltage may be conveniently obtained from the 50 c/s mains supply via a suitable transformer, and the actual voltage should be measured by means of an accurate voltmeter. The trace will appear as a horizontal line, and the deflecting voltage must be adjusted until the length of the line corresponds approximately to the diameter of the flat portion of the screen, avoiding the edges where the screen is more or less curved. See Fig. 63 (A).

3. Mark the positions of the two extremities of the line with chinagraph pencil, and join to make a horizontal line.

4. Disconnect the horizontal deflecting plates, and apply *the same* voltage to the plates for vertical deflection. A vertical trace will now appear on the screen. (See Fig. 63 (B)). This trace will be longer than the horizontal trace although the deflecting voltage is the same in each case. The reason is that

the plates for vertical deflection are nearer the cathode of the tube than are the plates for horizontal deflection, and the deflection sensitivity is therefore greater.

5. Mark the extremities of the vertical trace with chinagraph pencil and join up as before, thus forming a cross as in Fig. 63 (C)).

6. Draw a rectangle on the tube face such that the arms of the cross bisect the four sides of the rectangle. Draw also the diagonals of the rectangle. (See Fig. 63 (D)).

7. Measure the lengths of the horizontal and vertical lines in millimetres. The length of the horizontal line represents the peak-to-peak value of the applied voltage, or $2\sqrt{2}$ times its r.m.s. value. The horizontal deflection sensitivity of the instrument in millimetres per volt is therefore obtained by dividing the length of the horizontal trace by 2.82 times the r.m.s. value of the voltage used for the calibration test. Similarly, the length of the vertical line represents $2\sqrt{2}$ times the r.m.s. value of the deflection voltage, and the vertical deflection sensitivity can be calculated in the same way. A check should now be made against the published data for the particular tube incorporated in the instrument to confirm that the measured values of deflection sensitivities are in reasonable agreement with the nominal values quoted in the data.

8. It now remains to provide a suitable scale upon which deflections and voltages can be read. There are two methods of doing this. In the first, the vertical and horizontal sides of the rectangle can be accurately divided into centimetres or smaller units such as 5 mm intervals, and the corresponding points joined up as shown in Fig. 63 (E). Horizontal and vertical deflections can then be measured in mm and the corresponding voltages obtained from a set of calibration curves. Alternatively the voltage scales may be drawn direct on the tube face. For example, suppose that the measured vertical deflection sensitivity is found to be 0.25mm/V and the measured horizontal deflection sensitivity 0.20mm/V. The vertical voltage scale could then be made by drawing horizontal lines above and below the axis at intervals of 5mm, when each division would represent 20 volts. Similarly the horizontal scale could be made by drawing vertical lines on either side of the vertical axis and spaced 4mm apart, each division again representing 20 volts.

Of course a scale drawn with chinagraph pencil on the glass face of the tube is not likely to be very accurate or very permanent. Having marked the vertical and horizontal axes of the rectangle as described above, however, these measurements can be transferred to a square of thin perspex or other transparent material, and the scale completed in indian ink or, better still, engraved with a sharp scriber. The perspex sheet can then be clipped in front of the tube face. It must be emphasised that the calibration obtained in this way holds good only for the particular value of E.H.T. voltage used during the measurement, and it is a good plan to write on the calibration scale the voltage at which the test was taken.

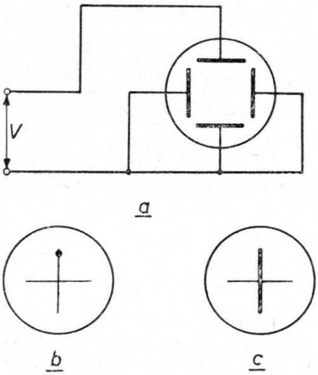

Fig. 64.

(a) Connections for deflection system when measuring voltage

(b) Trace when V is a direct voltage

(c) Trace when V is an alternating voltage

2. Some Simple Measurements

Having provided the oscilloscope with a calibration scale, some simple measurements may be undertaken in order to gain some practice in the use of the instrument. The simplest measurement is, of course, that of voltage. The voltage to be measured is applied between the plates for vertical deflection, the plates for horizontal deflection being connected together and to one of the plates for vertical deflection as indicated in Fig. 64, and the time base voltage switched off. If the voltage to be measured is a direct voltage the trace will be a stationary spot, its height above or below the horizontal axis indicating the value in volts. For an alternating voltage the trace will be a vertical line the length of which gives the peak-to-peak value of the voltage. In the case of a sinusoidal voltage the r.m.s. value is calculated from the formula:

$$V_{\text{r.m.s.}} = V_{\text{pk}} \times 0.707 \qquad \text{or, } V_{\text{pk-pk}} \times 0.354$$

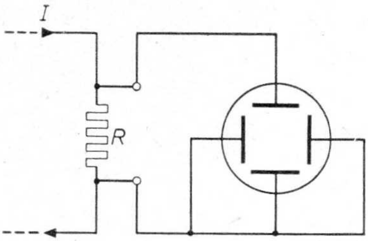

Fig. 65. Connections for deflection system when measuring current

In measuring current, the circuit shown in Fig. 65 is used, the oscilloscope actually measuring the voltage drop across a known resistance R, included in the main circuit. The current is then calculated from the formula $I = E/R$. As previously suggested, this particular measurement is of little practical value, chiefly because a rather high voltage drop across R is required to obtain a readable deflection, and there are few practical circuits where a resistor of sufficiently high value can be introduced to serve as the oscilloscope shunt.

For exactly the same reason, the oscilloscope is not a very suitable instrument for the measurement of low values of resistance. The circuit of Fig. 65 would be used again, R then being the resistance to be measured. A current of known strength is passed through R, and the voltage drop across R is measured by the oscilloscope. The value of R is then calculated from Ohm's Law — $R = E/I$. The oscilloscope is, however, quite capable of measuring high resistances to a good degree of accuracy. The circuit is given in Fig. 66, which will be at once recognised as an application of Wheatstone's Bridge. Here, P is a calibrated potentiometer forming the arms R_1 and R_2 of the bridge, and R_3 is a known resistance the value of which can be selected by the switch S. The resistance to be measured is connected as the fourth arm of the bridge. The potentiometer P is adjusted until no deflection

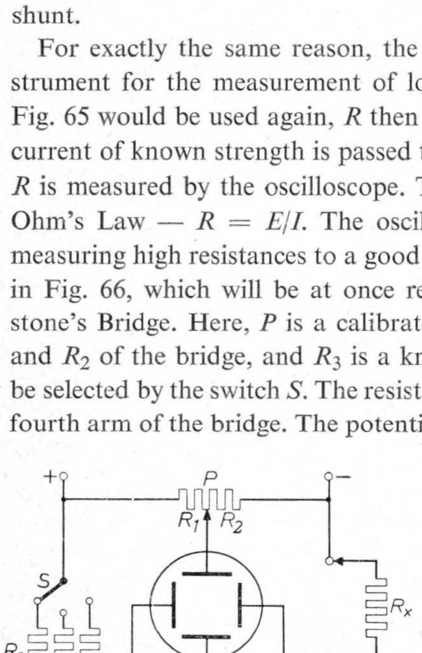

Fig. 66. Bridge circuit for measuring high resistances

At balance. $R_x = \dfrac{R_2 \times R_3}{R_1}$

appears on the screen. The value of the unknown resistor is then calculated from the formula:

$$Rx = R_2 \text{ x } R_3/R_1$$

Although these simple measurements may not be of very great value for single observations, they are often the basis of interesting applications in the testing of large numbers of similar components.

3. Measurements of Phase Relationship

The measurement of the phase difference between two alternating voltages of the same frequency is an important application of the cathode ray oscilloscope. One of the voltages is applied to the plates for horizontal deflection and the other to the plates for vertical deflection one plate of each pair being common to both deflecting circuits as shown in Fig. 67. Since one voltage will tend to produce a horizontal trace and the other a vertical trace, the two voltages applied simultaneously will produce a trace in the form of a sloping line *provided the two voltages are either in phase or in antiphase*, the slope of the line depending upon the relative amplitudes of the two voltages under examination. If the two voltages have any other phase relation the trace will be an ellipse, the slope of the major axis of the ellipse depending upon the relative amplitudes of the two voltages. Assuming that the cathode ray oscillograph is so connected that a positive-going horizontal deflecting voltage causes movement of the spot to the right and that a positive-going vertical deflecting voltage causes an upward movement of the spot, typical traces for various phase angles are given in Fig. 68.

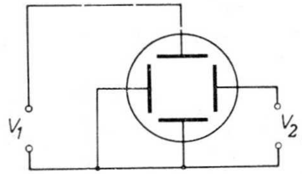

Fig. 67. Connections for deflection system when measuring phase relationship

The actual phase angle can be ascertained by first adjusting the two deflecting voltages to equality, and then measuring the major and minor axes of the elliptical trace. The phase angle is then:

$$\varphi = 2 \text{ arc tan } \frac{\text{length of minor axis}}{\text{length of major axis}} \text{ or, from Fig. 68 (d)}$$

$$\varphi = 2 \text{ arc tan } ab/cd$$

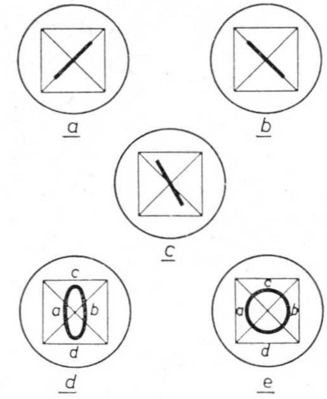

Fig. 68. Typical traces indicating phase displacement between two sinusoidal voltages

- *(a) Voltages of equal amplitude in phase* ($\varnothing = 0$)
- *(b) Voltages of equal amplitude in anti-phase* ($\varnothing = 180°$)
- *(c) Voltages of unequal amplitude in anti-phase* ($\varnothing = 180°$)
- *(d) Voltages of equal amplitude.* $\varnothing = 2 \text{ arc tan } (ab/cd)$
- *(e) Voltages of equal amplitude in quadrature* ($\varnothing = 90°$)

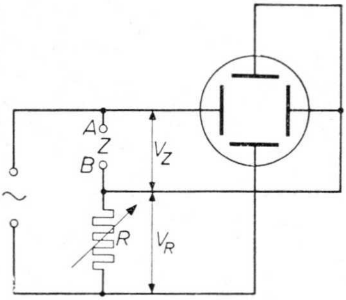

Fig. 69. Connections for deflection system when measuring reactance. R is a calibrated variable resistor. A resistor of known value, later replaced by the capacitor or inductor under test, is connected between A and B.

4. Measurement of Capacitance, Inductance and Reactance

The bridge method described earlier for the measurement of high resistances also forms the basis for making approximate measurements of capacitance, inductance and reactance. The circuit should be set up as indicated in Fig. 69, using the calibrated screen already prepared. In this circuit, Z is a resistor of about 40 kΩ, and R is a calibrated variable resistor. An alternating voltage of known frequency, (e.g. derived from the alternating current mains) is applied to the circuit as shown, and R is adjusted until the trace on the screen appears as a line coinciding with the diagonal of the rectangle on the calibration screen. In these circumstances $V_R = V_Z$.

The extremities of this line are now marked with a chinagraph pencil, and a rectangle with this line as diagonal is drawn as shown in Fig. 70 (*A*). Resistor Z is now replaced by the capacitor or inductor it is required to measure, and resistor R is again adjusted until the trace, which may be elliptical, lies within the rectangle already drawn. (See Fig. 70 (B)).

The reactance of the capacitor or inductor is equal to the value of R, and the capacitance or inductance can be calculated from the formulae:

$$C = 1/2\pi fR \text{ or } L = R/2\pi f$$

Fig. 70. *A* *a—c is the trace when Z in Fig. 12 is a resistor and the variable resistor R is adjusted until* $V_R = V_Z$

B *Trace when Z in Fig. 14 is the capacitor or inductor under test and variable resistor R is readjusted so that* $V_R = V_Z$

5. Frequency Comparison

It has already been shown (see page 7) that if an alternating voltage is applied to the plates for vertical deflection and a sawtooth voltage of the same frequency to the plates for horizontal deflection, the spot will trace out the voltage waveform and just one cycle of the wave will be displayed.

If the sawtooth frequency is half the frequency of the voltage under examination two complete cycles will be displayed and so forth. If, therefore, an accurately calibrated sawtooth generator of variable frequency is available, it is possible, by varying the sawtooth frequency, to measure the frequency of the voltage applied to the vertical deflection system.

Another method is to use, instead of a sawtooth horizontal deflecting voltage, a voltage of sinusoidal or approximately sinusoidal waveform. In the paragraph headed "Measurement of Phase Relationship" (page 79) it was shown that if alternating voltages of equal frequency but with a phase difference are applied to the two sets of deflecting plates, the resultant trace is a simple closed figure — an ellipse or circle. If, now, voltages of different frequencies are employed, traces of more complex form — the so-called Lissajous figures — will be produced. The ratio between the two frequencies can be determined by inspection. The method of doing this can best be explained by reference to Fig. 71, which shows a few typical figures. Imagine horizontal and vertical lines to be drawn at the top and side of the trace as shown in the figure. Then count the number of loops in the figure which touch the horizontal line, and also the number of loops which touch the vertical line. The ratio of the frequency of the vertical deflecting voltage, fy, to the frequency of the horizontal deflecting voltage, fx is then:

$$\frac{fy}{fx} = \frac{\text{No. of loops touching horizontal line}}{\text{No. of loops touching the vertical line}}$$

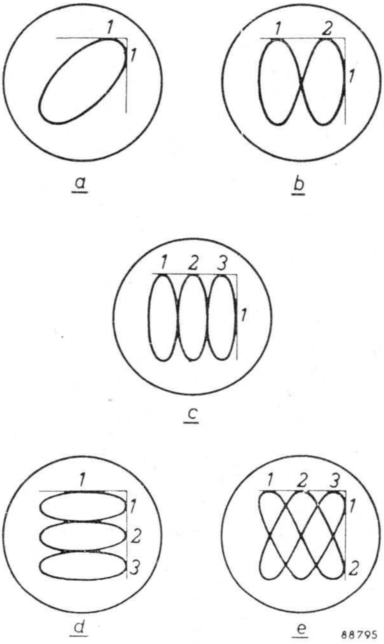

Fig. 71. Typical Lissajous figures for various frequency ratios fy/fx.

(a) $fy = fx$
(b) $fy/fx = 2$
(c) $fy/fx = 3$
(d) $fy/fx = {}^1/_3$
(e) $fy/fx = {}^3/_2$

Thus, in Fig. 71, (a) represents the trace when $fy = fx$; (b) is the form of trace when $fy/fx = 2$; (c) for $fy/fx = 3$; (d) for $fy/fx = 1/3$; and (e) for $fy/fx = 3/2$.

If either fy or fx is known, the other frequency can be calculated. This method is satisfactory when the frequency ratios are small and either whole numbers or simple ratios like 3/2 or 7/4; but for larger or more complex ratios it becomes difficult to count accurately the number of loops, particularly if the waveforms have a considerable harmonic content which will cause distortion of the Lissajous figures.

6. The Electronic Switch

A third method of frequency comparison depends upon the use of the so-called electronic switch, which is a device for permitting two different traces to be visible on a single screen at the same time, by applying two vertical deflecting voltages alternately at intervals which are short compared with the persistence of the screen material. The electronic switch is such a useful adjunct to a cathode ray oscilloscope that its basic principle can with advantage be described here. The apparatus incorporates a circuit for generating a square-topped alternating voltage — usually some form of multivibrator circuit is employed for this purpose. This square wave is applied simultaneously, but in anti-phase, to the control circuits of two similar amplifiers as indicated in Fig. 72, so that when one amplifier is operative the other is cut-off, and vice versa. The two voltages be to examined are applied to the input circuits of the two amplifiers as shown, the outputs of the amplifiers being connected to the vertical deflection plates. Two traces therefore appear on the screen in succession, and are repeated at a frequency equal to the frequency of the square wave. Owing to the persistence of the cathode ray tube phosphor, both traces will be visible at the same time ot the eye.

In using the electronic switch for frequency comparison, the voltage whose

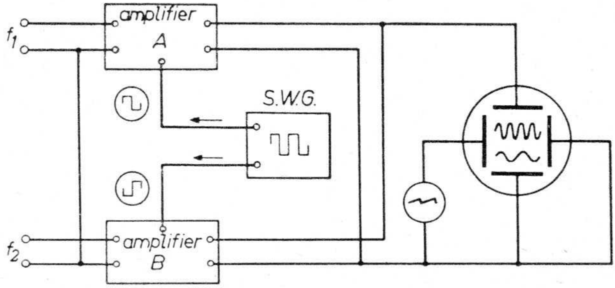

Fig. 72. Block diagram of electronic switch.

SWG is a square wave generator, and A and B amplifiers. In this example the inputs to A and B are sinusiodal voltages of frequencies f_1 and f_2. Both sine waves are displayed on the cathode ray tube screen

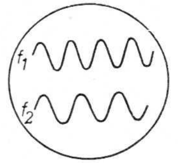

Fig. 73. Dual trace resulting from the connections shown in Fig. 72. The ratio $f_1 f_2$ can be determined by counting the number of complete cycles in a given length of each trace.

frequency it is desired to ascertain is applied to the vertical deflection plates via one arm of the electronic switch, and a voltage of known (and preferably adjustable) frequency is applied to the vertical deflection plates via the other arm of the electronic switch. The two traces then appear as in Fig. 73, and if the value of f_2 is known, the value of f_1 can be calculated from the ratio of the number of cycles of f_1 and f_2 which appear on a given length of time base.

7. Applications Involving a Circular Time Base

If two voltages of sinusoidal waveform and having a phase difference of 90° are applied to the plates for vertical and horizontal deflection, the resultant trace will be a closed figure of elliptical form with the two axes horizontal and vertical. If the two voltages are so adjusted that the maximum horizontal deflection is equal to the maximum vertical deflection, the ellipse becomes a circle. This circular trace is, of course, the path of a single spot which moves in a circle and completes one revolution during one complete cycle of the applied voltage. The angular displacement of the spot is thus proportional to time, and the radius of the trace is proportional to the peak value of the deflecting voltage. Finally, the existence or otherwise of a luminous spot can be controlled by the voltage applied between the cathode and first grid of the cathode ray tube. A circular trace of this kind can form a most useful time base which permits of a wide variety of applications.

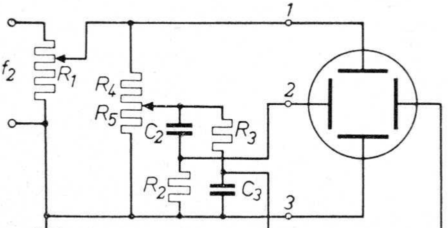

Fig. 74. Basic circuit for producing a circular time base,

R_1 determines the radius of the trace.
$R_2 = 1/2\ \pi\ fC_2$ $R_3 = 1/2\ \pi\ fC_3$
R_4 R_5 is a potentiometer for adjusting the trace to a perfect circle.

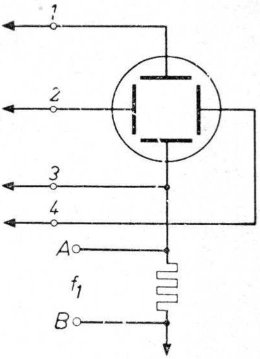

Fig. 75. Connections for deflection system when comparing the frequencies of two voltages using the circular time base method.
The points 1, 2, 3, 4 correspond to points 1, 2, 3, 4 in Fig. 74.

A basic circuit for producing a circular time base is shown in Fig. 74. Here, an alternating voltage is applied to the input terminals, its frequency determining the time corresponding to 360° angular movement of the spot. The potentiometer R_1 determines the radius of the trace although, as will be indicated later, it can also be arranged that the radius is varied by a signal applied to the anode of the tube, or to one of the deflection circuits. The two combinations R_2, C_2 and R_3, C_3 in which $R = 1/2\pi fC$ provide the necessary 90° phase difference between the horizontal and vertical deflecting voltages, and the potentiometer $R_4.R_5$ serves to compensate for the difference between the vertical and horizontal deflection sensitivities, and thus to ensure a truly circular trace.

A few typical examples of the use of the circular time base arrangement are given below.

8. Frequency Comparison

(a) The circuit is set up as shown in Fig. 75, the frequency of the time base input being several times less than that of the voltage under examination. The voltage to be examined is now applied between points A and B, that is to say between the deflection system and the tube anode. This voltage there-

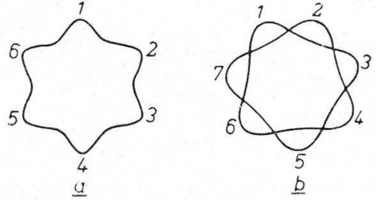

Fig. 76. Traces corresponding to (a) $f_1 f_2 = 6$ and (b) $f_1 f_2 = {}^7/_2$ using the circular time base method

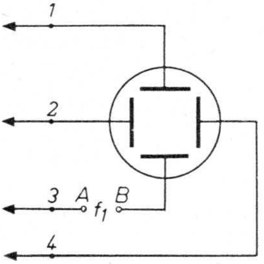

Fig. 77. Connections for the deflection system for the elliptical time base method of frequency comparison. The points 1, 2, 3, 4 correspond to points 1, 2, 3, 4, in Fig. 74

fore varies the effective anode voltage of the tube, and with it the deflection sensitivity, with the result that the circumference of the trace will carry a number of ripples, one for each cycle of the voltage under examination. The number of ripples gives the ratio between the signal frequency f_1 and the timebase frequency f_2. For example, in Fig. 76 (a) the ratio $f_1/f_2 = 6$. If a double trace appears the ratio is equal to the number of ripples divided by 2, and for a triple trace the number of ripples must be divided by 3 to give the frequency ratio. For example, the ratio in Fig. 76 (b) is 7/2.

(b) Alternatively, the signal voltage of frequency f_1 could be applied in series with one pair of deflection plates as indicated in Fig. 77. The trace will then be of elliptical form, bearing ripples as in Fig. 78. The frequency ratio is calculated in the same way as for the circular time base method, noting that it is only the upward pointing peaks of the ripples which must be counted.

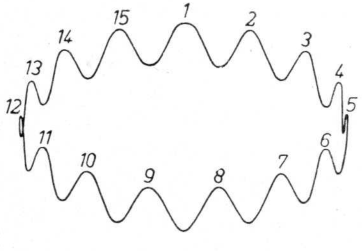

Fig. 78. Trace corresponding to $f_1/f_2 = 15$, using the elliptical time base method of frequency comparison

(c) The beam suppression method is the last method of frequency comparison which will be described. The oscilloscope is set up with a circular time base as before, but the first grid of the tube is given a heavy negative bias — approximately to cut-off point. The voltage to be examined, suitably attenuated if necessary, is now applied between cathode and grid of the tube, in series with the bias voltage. No illuminated spot will appear on the screen during negative half cycles of the signal, but positive half cycles will produce a spot. The trace will therefore appear as a series of discontinuous arcs or a succession of dots as shown in Fig. 79. In this method again the frequency ratio is given by the number of arcs or dots.

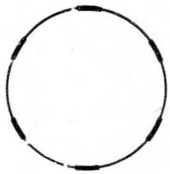

Fig. 79. Trace corresponding to $f_1/f_2 = 6$ *using the circular time base method with beam modulation*

9. Testing the Regulation of Watches

The same technique is employed in testing the regulation of watches. The circular time base is maintained at a very accurately controlled speed of, say, 30 cycles per second,or some other simple multiple of the correct frequency of the watch ticks. A crystal-controlled oscillator is usually employed for this purpose. The cathode ray tube is biased to cut-off so that under no-signal conditions no trace appears on the screen. The watch under test is placed near a sensitive microphone which converts the sound of the watch ticks to electrical impulses. These impulses, suitably amplified, are applied between cathode and grid of the tube, in series with the bias voltage, and each tick results in a bright spot. If the watch is correctly regulated the spot or spots will remain stationary. Movement of the spot in a clockwise or anti-clockwise direction indicates that the watch is either gaining or losing.

10. Checking the Speed of Camera Shutters

The circular time base is used in one of the many methods devised for measuring the exposure time of a camera shutter. In this application, the circular time base is maintained accurately at a known frequency — say 50 cycles per second. This means that the angular movement of the spot is 360° in 1/50 second. 180° in 1/100 second and so on. If, then, a photograph of the screen is taken, using the camera shutter to be tested, the exposure time, i.e. the speed of the shutter, can be ascertained by measuring the angle subtended by the arc-shaped trace (See Fig. 80). For very fast shutter speeds a higher time base frequency should be chosen since it is difficult to measure very small angles accurately. It goes without saying that a cathode ray tube of very short persistence must be used for this method of camera testing, for if the screen is of even medium persistence the calculated exposure time will be longer than the actual time by an amount approximately equal to the persistence time of the tube phosphor.

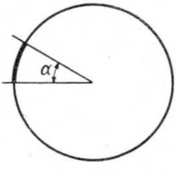

Fig. 80. Typical trace of a camera shutter speed test using the circular time base method

If the time base frequency is 50 c/s the spot travels through 360° in one-fiftieth of a second, and the shutter speed is:

$$\frac{1}{50} \times \frac{\alpha}{360^\circ} \text{ sec.}$$

11. "Echo" Methods of Measurement

An important group of applications of the cathode ray oscilloscope is that in which the required information is indicated by the time elapsing between the transmission of an impulse and the reception of the impulse after having been reflected by some obstacle. This technique is, of course, the basis of Radar and many navigational aids. This highly specialised subject is beyond the scope of the present book, but one industrial application of the echo technique is included, namely the detection of mechanical faults in materials.

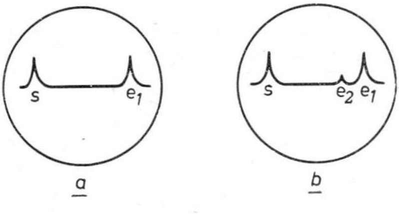

Fig. 81. Typical traces obtained when testing materials for flaws, using the echo method with ultrasonic impulses.
(a) applied pulse (s) and echo (e_1) when material contains no flaw.
(b) applied pulse (s), main echo (e_1) and secondary echo (e_2) showing existence of a flaw. Distance (s — e_1) represents the thickness of the specimen and distance (s — e_2) represents the depth at which the flaw occurs

12. Flaw Detection

In one method of flaw detection, a mechanical pulse of ultrasonic frequency, generated by applying a corresponding electrical pulse to a crystal transducer, is applied to one face of the material under examination and, passing through the material, is reflected from the opposite face and returns to the first face where it is received, say by a piezo crystal pickup and converted again into an electrical pulse. The original pulse is caused to trigger off a normal sawtooth time base voltage, the frequency of which is so chosen that the period of the stroke is somewhat longer than the time taken for the supersonic pulse to pass across the material and return. The returning pulse, applied to the plates for vertical deflection, produces a "blip" on the screen as represented in Fig. 81 (*a*). If, however, there should be a blow-hole or other cavity in the material, a secondary echo will be received before the true echo, as shown in Fig. 81 (*b*). The position of the flaw can then be accurately determined by measurement of the relative positions of the impulses shown on the screen.

13. Resonance Curves of Oscillatory Circuits

The cathode ray oscilloscope is a most valuable aid in the testing, adjusting and servicing of electronic equipment and particularly radio and television equipment. A single example of this type of application must suffice since the subject of radio and television servicing is so wide as to call for a complete book on its own. The example will be the examination of the response curve of a tuned circuit, as would be required in aligning the radio frequency and intermediate frequency circuits of a receiver. For this purpose it is necessary to provide a signal, the frequency of which is rhythmically varied above and below a known centre frequency, the value of which is itself adjustable. This frequency-modulated signal can, for example, be derived from the combination of a normal calibrated oscillator and a reactor valve, the reactor valve itself being controlled by the voltage generated by the time base. Such a device is sometimes termed a "wobbulator". The frequency-modulated signal is applied to the circuit under test, and the voltage across the tuned circuit is applied to the plates for vertical deflection. The height of the trace

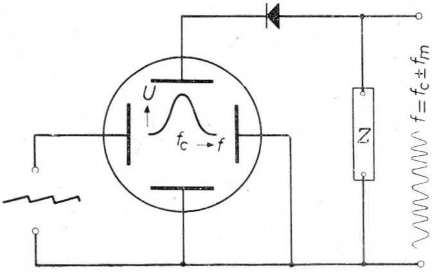

Fig. 82. Connections for deflection system when tracing response curves of oscillatory circuits by means of a frequency-modulated signal.

The instantaneous frequency f varies between $f_c + f_m$ *and* $f_c - f_m$*, where* f_c *is the centre or carrier frequency and* f_m *the maximum value of the modulating frequency* at any instant thus varies with the instantaneous value of the signal frequency. Since the time base frequency is locked to the frequency modulation, distances along the horizontal base will be proportional to the instantaneous frequency, so that the luminous spot will trace out the response curve of the circuit under test (See Fig. 82).

14. Hysteresis Loop Test

The response curve trace described above is but one of an almost limitless number of applications in which the relationship between two variables is required to be recorded. As a final example, the tracing of the hysteresis loop curve for various specimens of magnetic material will be described. The relationship to be displayed is that between the magnetising force (H), and the resultant magnetic flux (B). If the magnetising force is increased from zero to a maximum in one direction, then reduced to zero, increased to the same maximum but in the reverse direction and again brought back to zero, the change of magnetisation will lag behind the change of magnetising force, and if the two quantities are plotted as in Fig. 83, the curve will be of loop formation. The area enclosed in the loop represents a power loss in the circuit, and examination of the B/H curves of different specimens of material enables the most efficient to be selected, and also provides data of value when calculating, say, transformer windings. Fig. 84 shows one method of tracing the B/H curve of, say, a material to be used for transformer

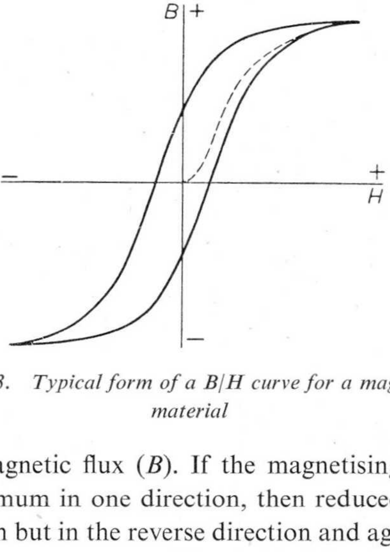

Fig. 83. Typical form of a B/H curve for a magnetic material

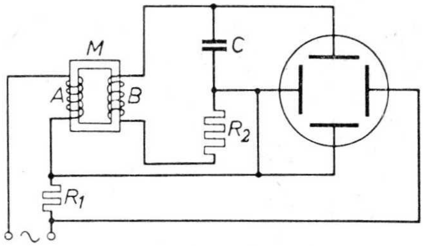

Fig. 84. Basic Circuit for deflection system when tracing hysteresis loop

laminations. The closed magnetic circuit M is composed of laminations of the material to be tested. On this core are two windings — A, which is supplied with alternating current derived from the mains through a suitable transformer, and B in which is induced an electromotive force due to the change of magnetising current through A. The voltage drop across resistor R_1 is proportional to the magnetising current, and is applied to the horizontal deflection plates. The voltage developed across B, however, is not proportional to the flux in the core M, but to the rate at which the flux is changing. By applying this voltage to resistor R_2 and capacitor C in series, however, the voltage across C will be proportional to the flux, and can therefore be applied, suitably amplified, to the vertical deflecting plates. The combination R_2, C is known as an integrating circuit, and to work effectively the values of R_2 and C must be so chosen that the reactance of C at the frequency used for the test is small compared with the resistance of R_2.

CHAPTER VII

STANDARD CATHODE RAY TUBES FOR OSCILLOGRAPHY

The following pages contain comprehensive data of a complete range of cathode ray tubes suitable for use in oscilloscopes. They are available in sizes ranging from those with screens 4 cm in diameter to those having screens 13 cm in diameter. For each size there are several different types of screen material which differ in the colour of the trace and the persistence of the image.

Information concerning the size and characteristics of the screen is given in the type nomenclature used for these tubes. The type number consists of two letters, followed by two groups of figures.

The first letter, D, indicates that the tube is arranged for electrostatic focusing and deflection.

The second letter, which may be B, G, R or P indicates the type of screen material according to the following code:

Type B screen gives a blue trace of high actinic value and is therefore particularly suitable for photographic recording. The image is of short persistence, falling to 0.1% of its maximum brightness within 20 milliseconds after the removal of the electron beam.

Type G screen gives a green trace and is preferable for visual observation since it provides a good contrast when viewed under normal lightning conditions. Moreover the trace is of somewhat longer persistance than that of the B screen, falling to 0.1% of its maximum brightness 48 milliseconds after the excitation is removed.

Type R screen is especially suitable for observing non-recurrent phenomena or recurring phenomena of very low frequency. The trace is of green-yellow colour and of long persistance, taking 20 seconds to die down to 0.1% of its maximum brightness.

Type P screen is again especially suitable for observing non-recurrent phenomena, since it takes 80 seconds for the trace to fall to 0.1% of its maximum brilliance. The screen consists of two layers of different material, one giving a bluish trace during excitation, and the other an after-glow af green-yellow colour.

The first group of figures in the type number indicates the diameter of the screen in centimetres.

The final group of figures provides a development identification and serves to distinguish between tubes of simular general characteristics but having minor variations.

Cathode-Ray Tubes for Oscilloscopes	DIMENSIONS		DEFLECTION		OPERATINGCONDITIONS				MAX. RATINGS		Screen types avaiable
	Screen Diam.	Overall length (appr.)	Symmetr. = S Asymmetr. = A		Anode Voltage		Deflection sensit y		Anode Voltage		
					Acceler Anode	P.D.A.[2]	Hor.	Vert.	Acceler Anode	P.D.A.	
Types[1]	m.m.	m.m.	Hor.	Vert.	Volt	Volt	mm/Volt	mm/Volt	Volt	Volt	
DG 4-1	40	160	S	S	800		0.25	0.16	1000		G-B-P
DG 4-2	40	160	S	A	800		0.25	0.16	1000		G-B-P
DG 7-5	70	160	S	S	800		0.25	0.16	1000		G-B-P-R
DG 7-6	70	160	S	A	800		0.25	0.16	1000		G-B-P-R
DG 7-31	70	172	S	A	400		0.39	0.25	800		G
DG 7-32	70	172	S	S	400		0.39	0.25	800		G
DG 7-36	70	296	S	S	1500		0.54	0.37	2500		G
DG 10-2	100	334	S	S	2000		0.35	0.27	2500		G-B-P-R
DG 10-3	100	337	S	A	1000		0.65	0.55	1200		G-B-R
DG 10-5	100	337	S	A	1000	1000 2500	0.65 0.37	0.55 0.32	1200	3000	G-B-R
DG 10-6	100	334	S	S	2000	2000 4000	0.35 0.28	0.27 0.22	2500	5000	G-B-P-R
DG 10-74[3]	100	341	S	S	2000	2000 4000	0.35 0.28	0.27 0.22	2500	5000	G
DG 13-2	130	425	S	S	2000	2000 4000	0.47 0.38	0.41 0.33	2500	5000	G-B-P-R

---

[1] See page 92.

[2] P.D.A. = Post Deflection Acceleration

[3] DG 10-74 is similar to DG 10-6 with flat face plate

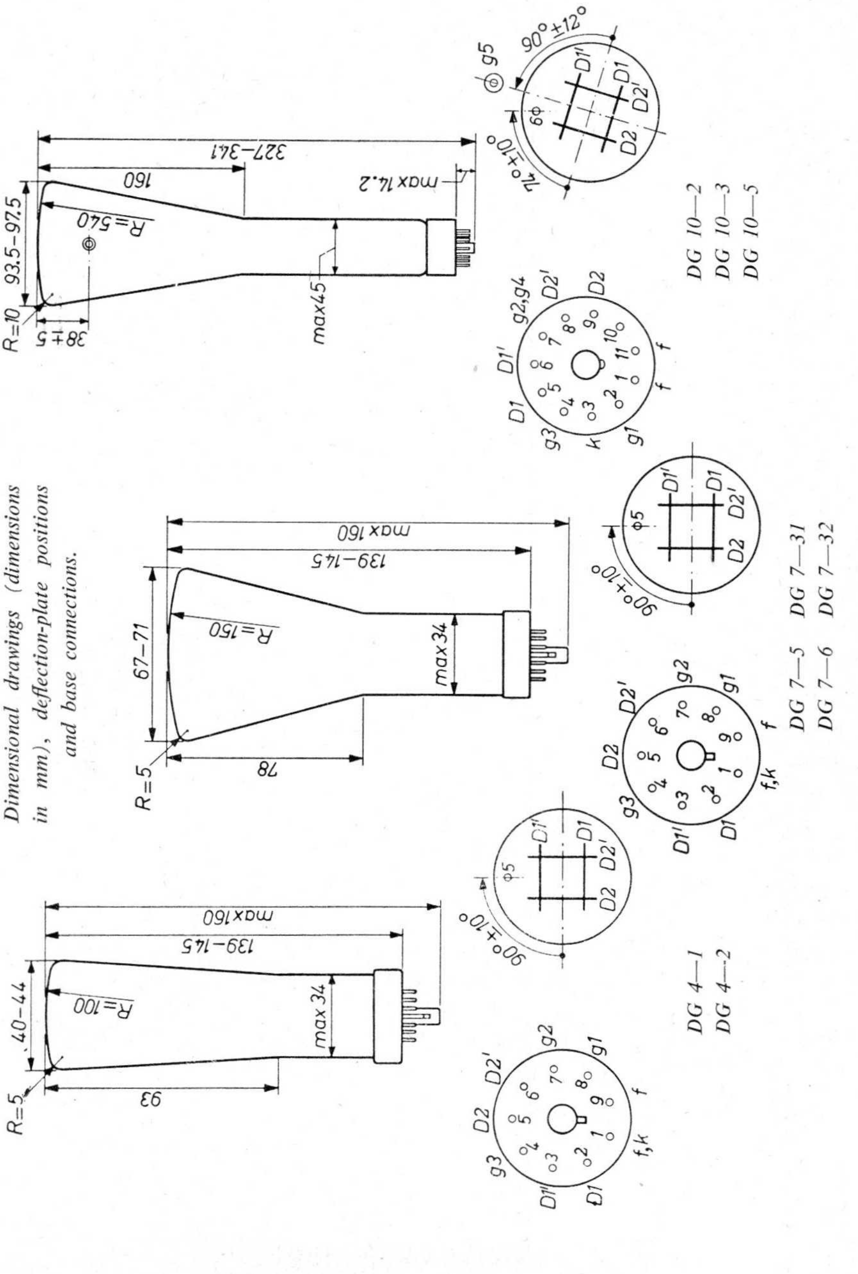

DG 10—2
DG 10—3
DG 10—5

DG 7—5 DG 7—31
DG 7—6 DG 7—32

DG 4—1
DG 4—2

Dimensional drawings (dimensions in mm), deflection-plate positions and base connections.

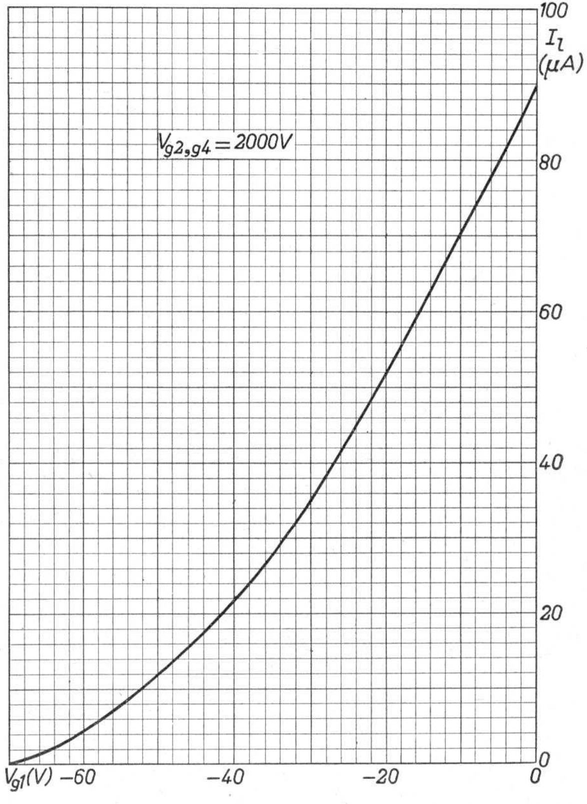

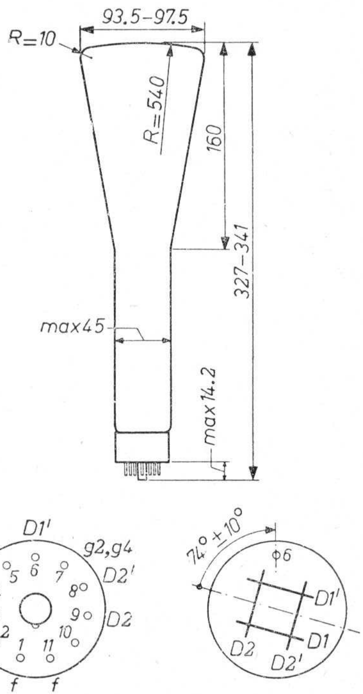

DG 10—6

DG 10—7

Dimensional drawing (dimensions in mm), deflection-plate positions and base connections

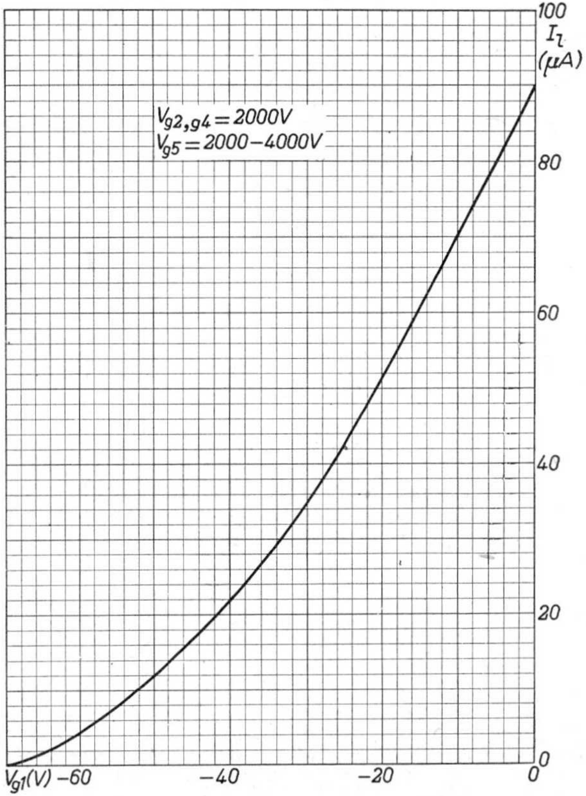

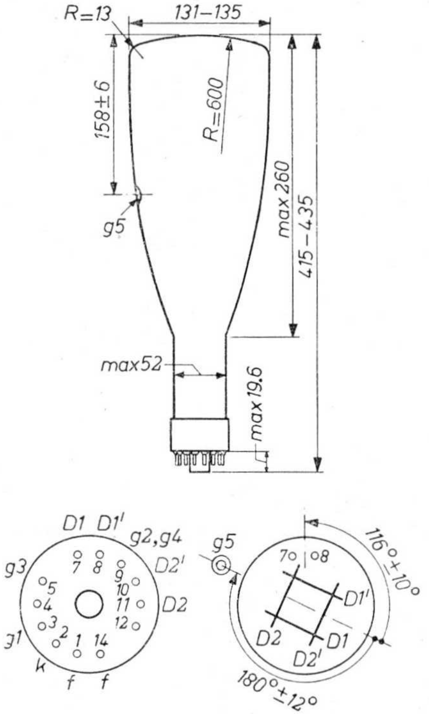

DG 13—2

Dimensional drawing (dimensions in mm), deflection-plate positions and base connections

CHAPTER VIII

SOME COMPLETE OSCILLOSCOPE CIRCUITS

In this chapter three complete cathode ray oscilloscopes are described together with their circuit diagrams. In each case the circuits are of fairly simple type and the designs are based, as far possible, on the use of commercially available components of normal commercial tolerances.

The construction of any of these instruments should be well within the capacity of the serious experimenter or hobbyist.

1. Circuit No. 1 Students' Oscilloscope Incorporating Cathode Ray Tube Type DG 7-31

This oscilloscope, the complete circuit diagram of which is reproduced in Fig. 85, has been designed primarily as a simple yet reliable instrument which will meet the requirements of the science laboratories of secondary schools and technical classes. The general design and layout can be so arranged that the instrument can be built by the students themselves without difficulty — for example, unit construction can be adopted so that one group of students may build the vertical amplifier, a second group the time base generator, a third the power supply unit and a fourth the cathode ray tube unit. For the sake of clarity the circuit diagrams of the individual units are also shown separetely in Figs. 86, 87, 88 and 89.

1.1. GENERAL DESCRIPTION

The cathode ray tube Type DG 7-31 is designed to operate satisfactorily at comparatively low E.H.T. voltages in the order of 500 volts. It has a 7-cm.

diameter screen, and gives a green trace. The circuit is so arranged that the trace is suppressed during the flyback. The vertical amplifier has a stepped attenuator giving the choice of five sensitivities ranging from 10 mV to 100V per cm. of deflection. Its frequency characteristic is substantially linear up to 20 kc/s.

The time base generator employs the Miller Transitron circuit, and has three adjustable frequency ranges covering between them frequencies from 12 c/s to 20 kc/s. A separate synchronising amplifier stage is provided for synchronising the time base with the signal applied to the vertical amplifier. Provision is also made for disconnecting the time base generator and taking a time base voltage from an independent external source.

The power pack employs two half-wave rectifiers and provides the various potentials required for operating the cathode ray tube, the H.T. supply to the amplifier and time base generator, and three separate 6.3-volt supplies for cathode heating.

An interesting feature is the "power and waveform outlet panel" shown at the top left-hand corner of Fig. 85. This panel enables high tension and heater supplies to be drawn from the power pack and to be used for driving auxiliary equipment such as a signal generator, and also permits various waveforms appearing in the power pack to be applied to and displayed by the oscilloscope, thus forming useful class demonstrations.

1.2. VERTICAL AMPLIFIER

As will be seen from Fig. 86, the amplifier comprises two stages, the first being a pentode voltage amplifier, V_3, directly coupled to an output stage consisting of the double triode V_4, which supplies two output voltages in anti-phase for application to the vertical or Y deflection plates of the cathode ray tube. The input signal is applied to the control grid circuit of V_3 via the stepped attenuator comprising R_6, R_7, R_8, R_9, R_{10} and R_{11} which provides a choice of five fixed values of sensitivity, namely 10mV, 100mV, 1.0V, 10V and 100V per cm. of vertical deflection, any one of which can be selected by means of switch S_2. This arrangement makes possible quantitative measurements when using a calibrated graticule. Alternatively, infinitely variable control of sensitivity could be provided by replacing R_7, R_8, R_9 and R_{10} by a logarithmic potentiometer of 1 megohn, retaining R_6 and R_{11}.

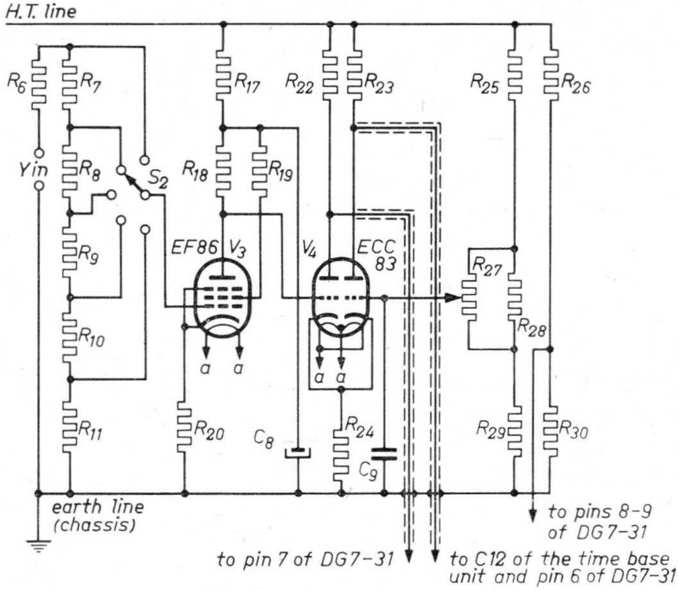

Fig. 86. Amplifier circuit

The two amplified outputs in antiphase are direct coupled to the vertical deflection plates and are obtained as follows: The amplified signal voltage at the anode of V_3 is applied directly to the control grid of V_4A, while the control grid of V_4B is maintained at a standing positive voltage equal to that at the control grid of V_4A, by means of the potential divider R_{25}, R_{27}, R_{28} and R_{29}. Fine adjustment of the standing potential at the grid of V_4B is obtained by the potentiometer R_{27} which also serves as the Y-shift control. Because V_4A and V_4B have a common cathode resistor R_{24}, the output voltages of the two tubes are in anti-phase. These two voltages are fed to the Y plates of the cathode ray tube, the potentials of these plates varying symmetrically about that of the anode of the cathode ray tube which is taken from the junction of R_{26} and R_{30} in the Y amplifier.

A proportion of the output voltage of V_4B is also taken, via R_{37}, to the control grid of the synchronising amplifier V_6 in the time base unit (see Fig. 87).

The remaining features of the Y-amplifier are quite conventional. R_{17} and

C_8 form the decoupling network for the anode of V_3; omission of decoupling capacitors in the cathode circuits of V_3 and V_4 permit negative feedback, thus reducing distortion; and the decoupling capacitor C_9 ensures smooth operation of the Y-shift control R_{27}.

1.3. TIME BASE GENERATOR

The circuit diagram of the time base generator is reproduced in Fig. 87. Two pentodes, Type EF80 are employed, of which one, V_5, is connected as a Miller Transitron oscillator while V_6 is the synchronising amplifier. Dealing first with the oscillator, switch S_4 enables either C_{13} C_{14} or C_{15} to be selected, thus providing three frequency ranges of 13c/s to 130c/s, 125c/s to 1.3kc/s and 1.25kc/s to 20kc/s. The potentiometer R_{34} serves for fine adjustment of the frequency in each range. Switch S_5, ganged with S_4, selects either C_{18}, C_{19} or C_{20} which, with R_{45}, control the shape of the time base waveform.

The sawtooth output variations at the anode of V_5 are taken via the blocking capacitor C_{10} to the network comprising R_{33}, C_{11}, R_{31}, and R_{32}, of which R_{33} is the X-amplitude control and R_{31} provides an adjustable direct voltage upon which the sawtooth waveform is superimposed, and thus serves as the X-shift control. Pulses appearing at the screen grid of V_5 during the flyback are applied via C_{16}, R_{42} and C_{17} to the grid of the cathode ray tube in order to suppress the beam, and hence the light spot, during the flyback.

As explained under "Vertical Amplifier", part of the output signal from the vertical amplifier is applied, via R_{37}, to the control grid of the synchronising amplifier V_6. The anode of this valve is connected via C_{22} to the suppressor grid of the oscillator valve V_5, and via C_{22} and either C_{18}, C_{19} or C_{16} to the screen grid circuit of the same valve. If the frequency of the time base is so adjusted that it is equal to, or is a multiple or sub-multiple of the frequency of the vertical deflection voltage, and if R_{37} is also suitably adjusted, the time base valve will be pulled into phase with the vertical deflection by the pulses, derived from the Y amplifier, and applied by the synchronising amplifier to the screen grid of V_5.

When it is desired to use an external source of horizontal deflecting voltage in place of the in-built time base generator, the coarse time base frequency control $S_{3\text{-}4\text{-}5}$ should be moved to the fourth position (extreme left-hand

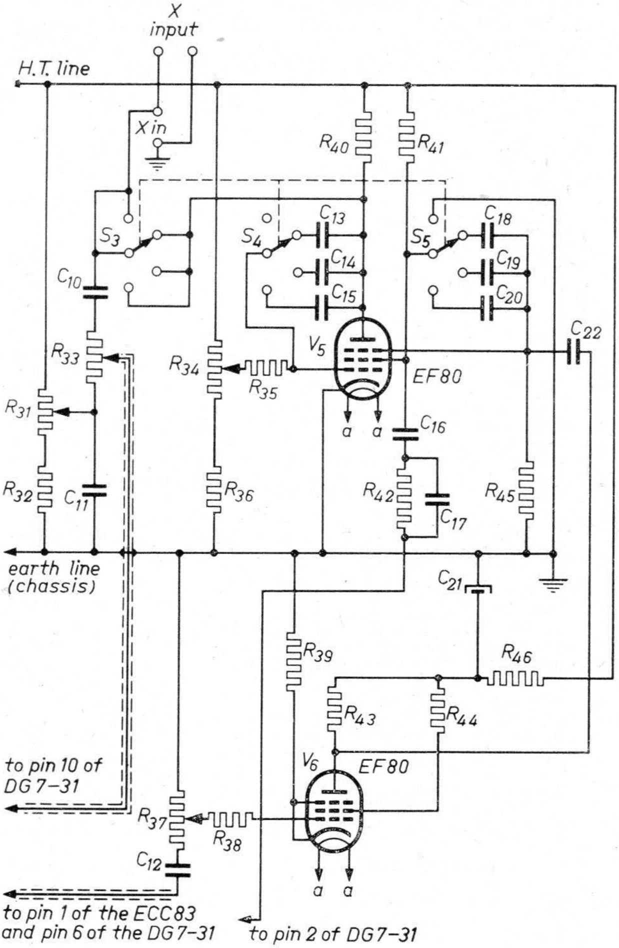

Fig. 87. Time base circuit

position) when the terminals marked "X in" are connected to the horizontal deflection system of the cathode ray tube. Alternatively, it is possible to employ the internal time base generator for supplying a sawtooth voltage to some other piece of apparatus. In this case, however, switch $S_{3\text{-}4\text{-}5}$ must be moved to the desired range, and the output taken from the "*X* in" terminals.

The decoupling network R_{46}, C_{21} decouples the anode and screen grid supplies to V_6 and thus reduces the risk of positive feedback between the synchronising amplifier and the vertical amplifier via the high tension line.

1.4. THE POWER PACK

The circuit of the power pack is shown in Fig. 88, from which it is seen that the unit employs two half-wave rectifier tubes type EY84, working in conjunction with a mains transformer having a centre-tapped H.T. secondary wound for 300-0-300 volts and three low tension secondaries wound for 6.3 volts. The unit is designed to give a high tension output at 350 volts for the *Y*-amplifier and time base generator and in addition is capable of supplying up to 20 mA at 350 V for driving auxiliary equipment. Of the three low tension outputs, one, rated at 1.0 A supplies the heater of the cathode ray tube; another, rated at 2.0 A supplies the heater current for the E.H.T. rectifier, while the third, rated at 2.5 A supplies the heater current for the *Y*-amplifier and time base generator and the filament of the indicator lamp, and can also furnish up to 0.6 A for heater supply to auxiliary equipment.

V_1, the H.T. rectifier tube, takes its supply from the centre tap of the mains transformer secondary and thus utilises only half of the secondary winding; V_2, on the other hand, which supplies the E.H.T. current of the cathode ray tube, utilises the whole of the transfromer secondary.

It is important to note that the two rectified outputs are effectively in series, with the chassis negative with respect to the H.T. supply but positive with respect to the E.H.T. supply. *It is essential, therefore, that the chassis and instrument case is efficiently earthed.*

The two resistors R_3 and R_2 are current limiting resistors to prevent damage to V_1 and V_2 respectively in the event of short circuits on the output side. The values of these two resistors depend upon the D.C. resistance of the transformer windings and upon the turns ratio of the windings. The appropriate values for any given transformer can be calculated from the following formula:

$$R_{lim} = R_s + n^2 R_p + R_{add}$$

where:

R_{lim} = Total series resistance
R_s = Resistance of transformer secondary winding

R_p = Resistance of transformer primary winding
R_{add} = Additional series resistance
n = Primary to secondary ratio of transformer.

From the values of R_{add} found from this formula for V_1 and V_2, the resistance of R_1, i.e. 10 ohms, must be deducted in order to give R_2 or R_3. The function of R_1 will be explained in the section dealing with the waveform and power output panel. The remaining features of the circuit are quite conventional and call for no further explanation.

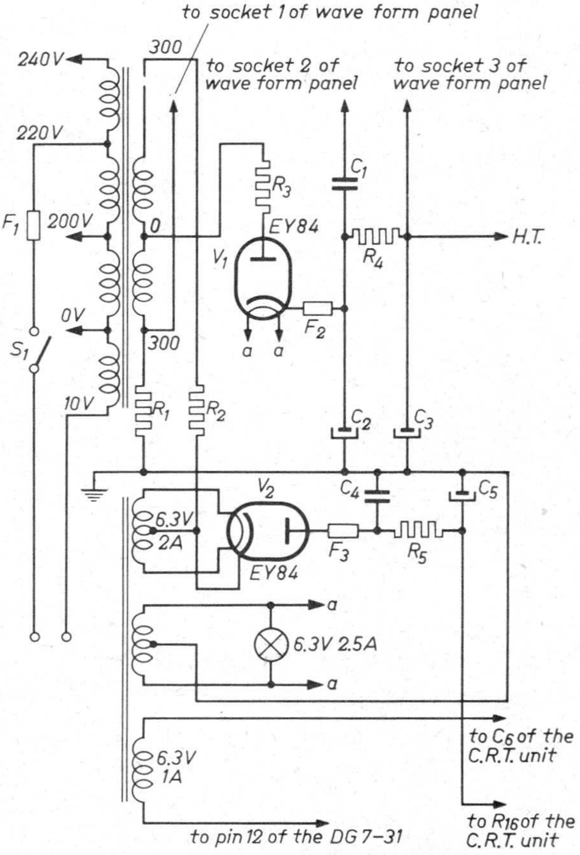

Fig. 88. Power supply unit circuit

1.5. THE CATHODE RAY TUBE UNIT

The circuits associated with the cathode ray tube are shown in Fig. 89. Although the D.C. supply furnished by rectifier V_2 has been referred to as the E.H.T. supply, the cathode ray tube is, in effect, supplied from the outputs of both V_1 and V_2 in series, the accelerator anode of the cathode ray tube being connected to the junction of R_{26} and R_{30} in the Y-amplifier (see Fig. 86), while the remaining electrodes of the cathode ray tube are supplied from the voltage dividing chain comprising R_{12}, R_{13}, R_{14}, R_{15} and R_{16}. Of these, R_{13} is the focus control and R_{16} the brightness control.

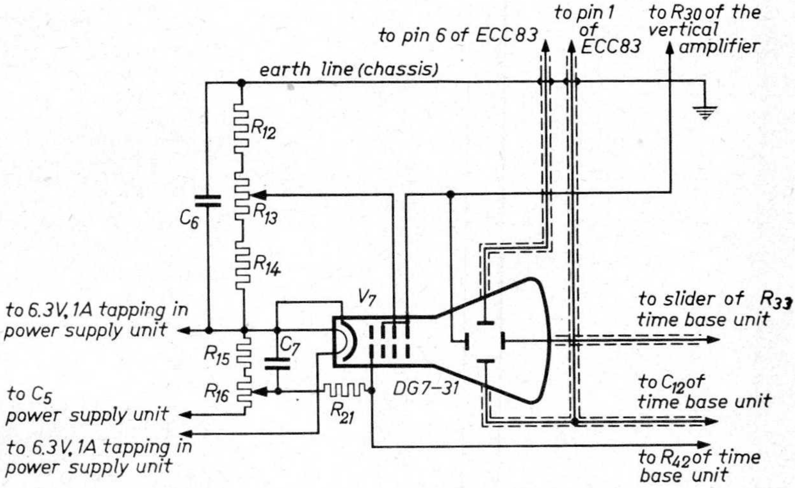

Fig. 89. Cathode ray tube circuit

1.6. POWER OUTPUT AND WAVEFORM PANEL

Arrangements for drawing both high tension and low tension supplies from the power pack to feed auxiliary apparatus, and for taking vertical deflection voltages for the purpose of displaying on the oscilloscope screen the various waveforms appearing in the power pack, are provided on the small panel indicated at the top left-hand corner of the main circuit diagram, Fig. 85.

This panel carries a 4-pin plug for the power take-off and five terminals marked 1, 2, 3, 4 and *E* for the waveform take-off.

As previously stated, the available power output is up to 20 mA D.C. at 350 V and 0.6 A at 6.3 V A.C.

The following waveforms are available from various combinations of terminals 1.2.3.4 and *E*:

A Sine wave voltage of 3.15 $V_{\text{r.m.s.}}$ appearing across one half of one of the 6.3 V secondaries of the mains transformer can be taken between terminals 4 and *E*.

Half-wave Rectification can be demonstrated by displaying the voltage drop of approximately 1.0 V across resistor R_1, and taken between terminals 1 and *E*.

The Effect of the Reservoir Capacitor C_2 can be demonstrated by displaying the ripple voltage at the cathode of V_1, taken between terminals 2 and *E*. In this demonstration the direct component of the voltage at this point is blocked by capacitor C_1.

The Effect of the Smoothing Filter R_4, C_3 can be demonstrated by displaying the high tension potential (350 volts D.C.) appearing between terminals 3 and *E*.

1.7. LAYOUT

Finally, the photographs reproduced in Figs. 90 and 91 show an internal view and an external view of a prototype instrument which was made up for school use. Each unit is assembled on a separate sub-chassis with the controls situated at the front end and a tag board at the rear to which are connected those points in the circuit which have to be connected to other units. The various sub-chassis are bolted to a front panel, and the whole is enclosed in a metal case. Alternatively, of course, the various units could be enclosed in separate boxes with multi-core cables for the interconnections.

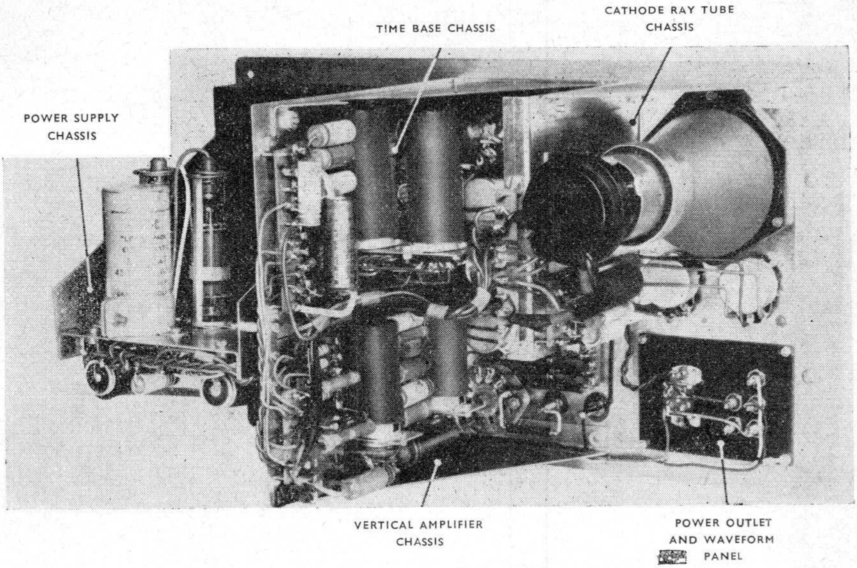

Fig. 90. Internal view of oscilloscope

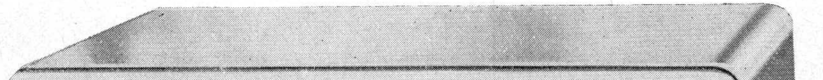

Fig. 91. External view of oscilloscope

TUBES AND ASSOCIATED COMPONENTS

2 off Rectifiers, type EY84.
1 off Pentode, type EF86.
1 off Double triode, type ECC83.
2 off Pentode, type EF80.
1 off C.R.T., type DG7-31.
2 off B9A valve-holders with retaining clips and top cap connectors.
4 off B9A nylon loaded valve-holders with screening skirts.
4 off valve screening cans.
1 off Mu-metal screening can for DG7-31.
1 off B12A valve-holder.

OTHER COMPONENTS

1 Mains transformer
Primary 10-0-200-220-240V.
Secondary 300-0-300V. 120mA.
3·15-0-3·15V. 2A.
3·15-0-3·15V. 2·5A.
6·3V 1A.

2 off Cartridge fuse holders
1 off panel fuse holder
1 off 250mA cartridge fuse.
1 off 150mA cartridge fuse
1 off 2A cartridge fuse
1 off 6·3V indicator lamp and holder
1 off mains switch.
1 off, one wafer, one pole, five-way rotary switch.
1 off two wafer, three pole, four-way rotary switch.
4 terminals (2red, 2 black)
9 control knobs.
1 4-pin socket and plug
5 single sockets (4 red, 1 black)
3 rubber grommets ($\frac{1}{2}$in., $\frac{3}{4}$ in., $\frac{1}{4}$ in.).

2. Circuit No. 2 A simple oscilloscope for the service engineer

The instrument described below has been designed primarily to meet the requirements of the radio and television service engineer. While entirely adequate for this purpose, and incorporating several useful optional assessory features, care has been taken to avoid over-elaboration. Moreover, nearly all, if not all the components used are of types and values commonly available on the shelves of the service department.

2.1. GENERAL DESCRIPTION

The oscilloscope incorporates a Type DG 7-32 cathode ray tube with 7 cm diameter screen. It is operated at an anode voltage of 400 V, and with both the vertical and the horizontal deflecting voltages applied symmetrically.

The vertical amplifier has a maximum sensitivity of 100 mV/cm, but this can be reduced to 1000 mV/cm by means of an attenuator probe, or increased to 1 mV/cm by means of a pre-amplifier probe unit. The time base frequency is adjustable between 20 c/s and 20 kc/s and the sweep width between 2 cm and 8 cm. The beam is suppressed during the flyback, and provision is made for synchronising the timebase with an internal or an external signal or with the 50 c/s electricity mains.

2.2. VERTICAL AMPLIFIER

The complete circuit diagram of the oscilloscope is reproduced in Fig. 92, the centre portion of which shows the vertical amplifier. It employs two triode-pentodes, Type ECF80. The triode section of the first of these valves, (V_2) is connected as a cathode follower and is coupled to the pentode section via C_8 and R_{16}, the latter serving as a continuously variable gain control. The pentode section of V_2 is resistance-capacitance coupled to the pentode section of V_3, the two pentodes providing a gain of about 60 over a bandwidth of 2.5 Mc/s. The output of the pentode section of V_3 is coupled via C_{12} to the grid of the triode section which operates as a phase splitter, permitting a symmetrical voltage to be taken via C_{13} and C_{14} to the vertical deflection plates of the cathode ray tube.

A signal can be taken from the output of the cathode follower (triode section of V_2) via R_{27} for synchronising the timebase. Taken from this point, the synchronisation will not be affected by operation of the gain control R_{16}.

The control grid of the cathode follower is connected via C_7 to one of the input terminals. If the signal source is connected directly to the input terminals of the main instrument the input resistance is 1 MΩ and the input capacitance 20 pF. The maximum sensitivity is 100 mV/cm and the instrument can handle signals up to 30 V. The frequency response is flat to within 3 dB from 2 c/s to 2.5 Mc/s.

By means of the high-impedance attenuator probe unit indicated as a separate unit at the top left-hand corner of the amplifier diagram, the overall sensitivity can be reduced to 1000 mV/cm and the maximum signal input increased to 300 V, the frequency response remaining unchanged, while the input resistance and input capacitance are 10 MΩ and 10 pF respectively. This probe consists of a 10 MΩ resistor, R_{11}, in parallel with a variable capacitor C_6 of 0.3 to 3 pF, the whole mounted in a screened box.

In view of the great interest in high fidelity sound reproduction, provision has been made for an alternative input probe unit, in the form of a pre-amplifier having a flat response between 5 c/s and 20 kc/s. The circuit is shown in Fig. 93. It comprises an EF86 pentode in a conventional circuit and gives a gain of 100 over the specified frequency range when connected to the oscilloscope by 2 feet of 75Ω television-type screened co-axial cable. It thus increases the overall sensitivity to 1 mV/cm (maximum signal 0.3 V), the input resistance then being 0.5 MΩ and the input capacitance 10 pF. A switched attenuator is incorporated in the unit, which reduces the sensitivity to 10 mV/cm and increases the maximum signal to 3 V.

2.3 TIME BASE GENERATOR

The circuit of the time base generator is shown in the lower section of Fig. 92. It employs two valves — a pentode Type EF80 (V_5) operated as a Miller-transitron saw-tooth oscillator, and a double triode Type ECC81 (V_4), one section of which serves to amplify the synchronising signal, the other section being a phase inverter to enable a symmetrical saw-tooth voltage to be taken via C_{31} and C_{32} to the plates for horizontal deflection.

Switch S_2b is the coarse frequency control, and selects suitable values of cathode-to-anode capacitance to give five overlapping ranges covering 20 c/s to 20 kc/s. Switch S_2a selects appropriate values of screen-to-suppressor capacitance. Variable resistor R_{40} is the fine frequency control.

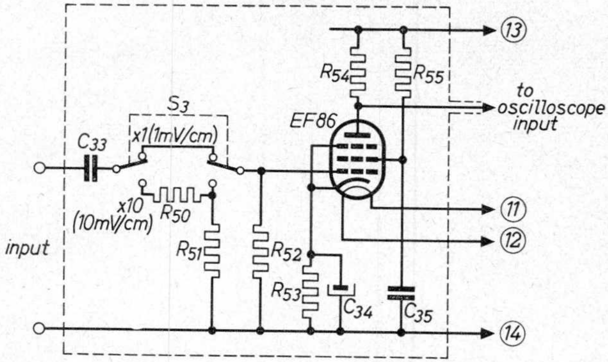

Fig. 93. High-gain Probe

The saw-tooth voltage available at the anode of V_5 is about 150 V, but the horizontal sweep is continuously variable between 2 cm and 8 cm by means of the potentiometer R_{39} which forms part of the anode load of V_5. The connection between the anode of V_5 and R_{39} should be screened.

Negative pulses obtained from the screen of V_5 and limited by the germanium diode D_2 result in a flat-topped wave being developed across R_{36}. This is applied to the grid of the cathode ray tube and has the effect of suppressing the beam during the fly-back period.

2.4 SYNCHRONISING AMPLIFIER

Section V_4a of the double triode is the synchronising signal amplifier, its control grid being connected via C_{15} to the socket marked *SYNC. EXT.*, to which the synchronising signal should be applied. This signal may be taken from an external source, e.g. from a suitable point in the receiver under service. Alternatively, by linking the sockets *EXT* and *INT* a synchronising signal can be taken from the *Y* amplifier, or by linking sockets *EXT* and "50 c/s" the timebase can be synchronised with the frame frequency, i.e. with the 50 c/s mains.

2.5 CALIBRATION

A useful provision is the series of sockets market *CAL* whereby 50 c/s signals of 0.1, 1.0, 10 or 50 V*pk-pk* can be obtained and applied to the *Y* amplifier in order to set the gain control to a known sensitivity.

2.6. SHIFT CONTROLS

No shift controls are provided in the basic design. However, these can be added by reducing the values of R_{25}, R_{26}, R_{45} and R_{46} to 3.9 MΩ each and introducing the potentiometers R_{48} and R_{49} as indicated in Fig. 94. It should be noted that when making this modification the connection to the final anode of the cathode ray tube must be moved to the junction of R_8 and R_9.

2.7. THE POWER PACK AND CATHODE RAY TUBE CIRCUIT

A single power transformer is employed, having a high tension secondary delivering 40 mA at 250-0-250 V and two low tension secondaries, one rated at 6.3 V 2 A and the other at 6.3 V 0.3 A. The high tension supply at about +310 V for the Y amplifier and the time base generator is obtained from the full wave rectifier, Type EZ80 (V_1).

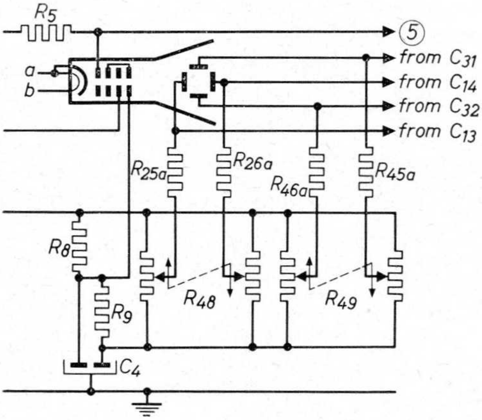

Fig. 94. Shift Controls (optional)

The cathode ray tube is fed from this same high tension supply in series with a further supply at —300 V obtained via the metal rectifier MR_1. The potentiometers R_3 and R_4 are, respectively, the brightness and focus controls.

2.8. LAYOUT

Figs. 95 and 96 show the upper and undersides of a prototype instrument to the above design. It was not found essential to use internal screening except

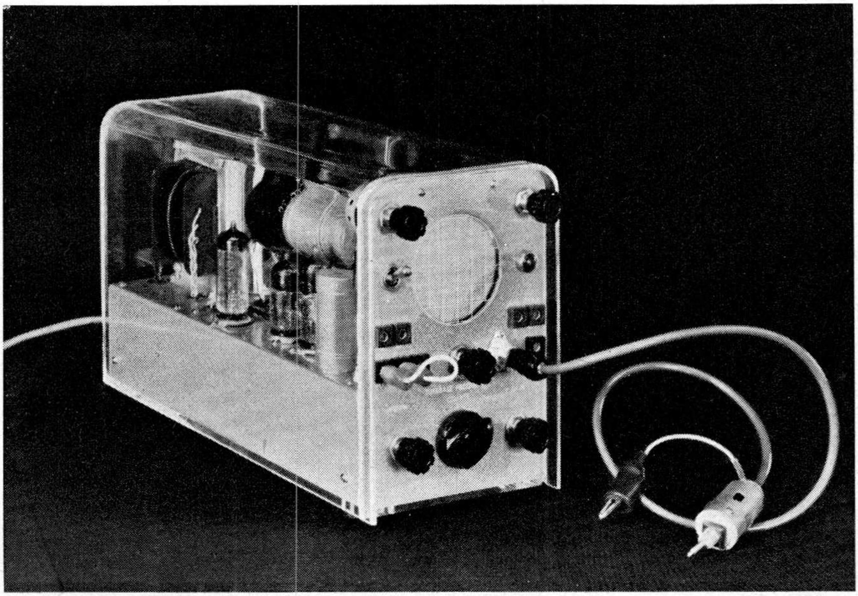

Fig. 95. Upper side of chassis

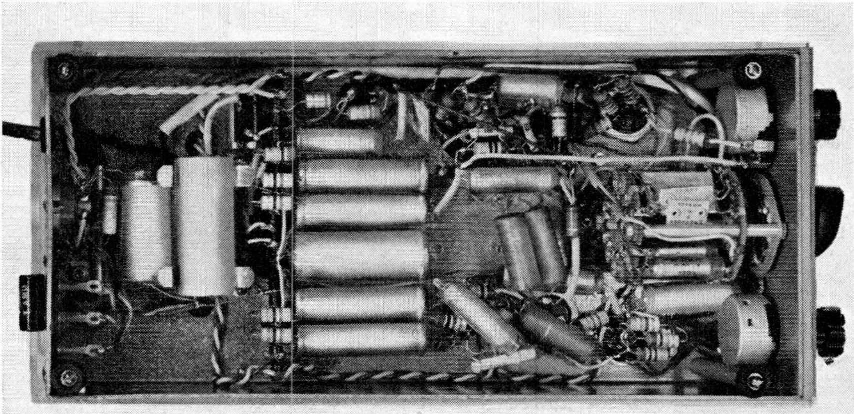

Fig. 96. Under side of chassis

for the connection between the anode of V_5 and R_{39}. It is, however, desirable to keep leads as short as possible, especially in the vertical amplifier, while in order to maintain the full bandwidth, stray capacitance to earth should be kept to a minimum. The *Y* amplifier and the time base generator should be kept reasonably far apart. In the arrangement illustrated the amplifier is on the left of the cathode ray tube and the time base generator on the right, with the power transformer at the rear of the tube.

Because the instrument is intended primarily for use in television servicing, its chassis cannot be tied to earth. Care must be taken, therefore, to ensure that the earth lead on the probe, or a separate wire from the earth socket, is taken to the earth of the circuit under test.

3. Circuit No. 3 A versatile oscilloscope in which the time base generator can be converted into an amplifier for external horizontal deflecting signals

The usefulness of a cathode ray oscilloscope is greatly enhanced if the circuit includes, in addition to the time base generator, an amplifier for horizontal deflection voltages derived from an external source. The block diagram reproduced in Fig. 97 shows such an arrangement, switch *S* connecting the plates for horizontal deflection either to the time base generator or to the horizontal amplifier. This arrangement has several drawbacks, however. In the first place, the additional valves increase the cost of the apparatus, and secondly, the unit not immediately employed, although not connected to the cathode ray tube, continues to operate and thus consumes unnecessary energy while, if it is the time base generator which is not being used, there is a risk that the oscillations which it generates may cause interference in the horizontal amplifier.

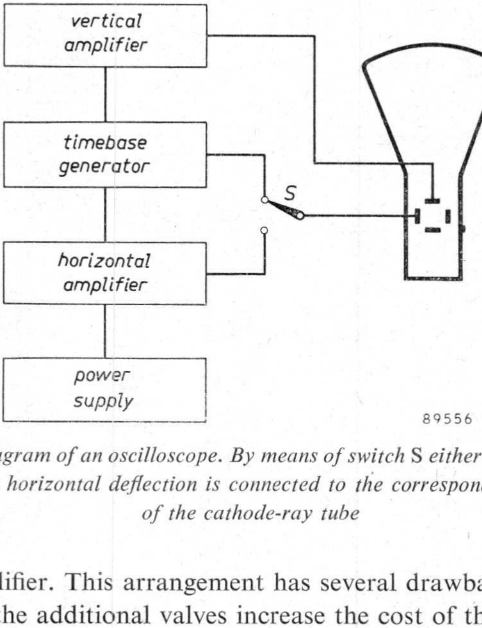

Fig. 97. Block diagram of an oscilloscope. By means of switch S *either a timebase generator or an amplifier for horizontal deflection is connected to the corresponding deflection plates of the cathode-ray tube*

These disadvantages are overcome in the instrument described below by so arranging the circuit that both the time base generator and the horizontal amplifier employ the same valves, the cange-over from saw-tooth generator to amplifier being accomplished by re-arranging the connections by means of a 10-way change-over switch.

3.1. GENERAL DESCRIPTION

This instrument, the complete circuit diagram of which is reproduced in Fig. 98, is characterised by high sensitivity and very good time base linearity over a wide frequency range, combined with a compact and economical design. The cathode ray tube is Type DG7-32 which has a 7 cm diameter screen and is designed for symmetrical deflection voltages. Although this necessitates push-pull output stages for both vertical and horizontal deflection, it has been possible, by employing double triodes throughout and by using selenium rectifiers in place of thermionic diodes, to limit the tube complement to four valves and the cathode ray tube, as indicated below:

V_1 ECC83 double triode — voltage amplifier for vertical deflection
V_2 ECC81 double triode — push-pull output valve of vertical amplifier
V_3 DG7-32 cathode ray tube
V_4 ECC81 double triode — push-pull output valve of horizontal amplifier
V_5 ECC83 double triode — blocking oscillator and voltage amplifier for horizontal deflection

3.2. PERFORMANCE SPECIFICATION

Sensitivity

Between vertical deflection plates,	
terminals T_4 and T_5	10 V_{rms}/cm
Between horizontal deflection plates,	
terminals T_7 and T_8	16 V_{rms}/cm
At input of vertical amplifier,	
terminals T_2 and T_3	10 mV_{rms}/cm
terminals T_1 and T_3 (approx.)	50 mV_{rms}/cm
At input of horizontal amplifier	
terminals T_{11} and T_{12}	16 mV_{rms}/cm
terminals T_{10} and T_{12} (approx.)	80 mV_{rms}/cm

Between terminals T_1 and T_3 or between terminals T_{10} and T_{12} (approx.)	300 V_{rms}

Frequency response

Vertical amplifier	
from 0.5 c/s to 200 kc/s	—1 dB
at 250 kc/s	—3 dB
Horizontal amplifier	
from 0.5 c/s to 200 kc/s	—1 dB
at 250 kc/s	—3 dB

Maximum input voltage

Between terminals T_2 and T_3 or between terminals T_{11} and T_{12} (approx.)	60 V_{rms}

Input resistance

0—60 volt input circuits (approx.)	2 MΩ
0—300 volt input circuits (approx.)	10 MΩ

Input capacitance

At terminals T_2 or T_{11} (approx.)	5 pF
At terminals T_1 or T_{10} (approx.)	1 pF

Timebase frequencies

Position on S_4	Frequency range (c/s)
1	30 000 to 120 000
2	10 000 to 40 000
3	3 000 to 12 000
4	1 000 to 4 000
5	300 to 1 200
6	100 to 400
7	30 to 120
8	10 to 40
9	3 to 12
10	50 c/s sinusoidal

3.3. TIMEBASE AND HORIZONTAL AMPLIFIER

An interesting feature of the design is the timebase generator which, by means of a simple switching operation, can be converted into an amplifier for horizontal deflection, having a performance identical with that of the vertical amplifier, thus permitting phase measurements over a wide frequency range.

This unit comprises the two double triodes V_4 and V_5. In the "timebase" position of switch S_6 the left-hand section of V_5 is connected as a blocking oscillator and the right-hand section as a cathode follower, V_4 functioning as the push-pull output stage. In the "amplifier" position of S_6 the left-hand section of V_5 is connected as a cathode follower, and the right-hand section as a conventional voltage amplifier, the amplified signal being taken from the anode circuit to the push-pull stage. The performance of the horizontal amplifier is identical with that indicated in the paragraph describing the vertical amplifier.

When V_5 is operating as timebase generator, step control of the sawtooth frequency is obtained from switch S_4 which provides a choice of capacitances. Position 10 of this switch provides a sinusoidal timebase frequency of 50 c/s. R_{64} is the fine control for the sawtooth voltage.

Three alternative sources of timebase synchronising signal are provided via switch S_7. In position 1 of this switch the synchronising circuit is switched off. In position 2 the synchronising signal is taken from the output of the vertical amplifier; in position 3 from an internal 50 c/s sinusoidal source; and in position 4 from an external source via terminal T_9 at which a voltage of from 0.5 to 5 V is necessary. In each case the synchronising signal is applied across a resistor in the cathode circuit of the blocking oscillator. This resistor takes the form of a germanium diode (*G* in Fig. 98) which has a comparatively high resistance during the forward stroke, giving efficient synchronisation, but a low resistance during the flyback.

Two furtehr features of this unit should be noted. A neon lamp, Type Z 10 ("*N*" in Fig. 98) is connected between the right-hand control grid of V_4 and earth. This lamp becomes conductive during the change-over from oscillator to amplifier and vice versa, and so prevents excessively high voltages occuring between the grid and cathode of the right-hand section of V_4. The voltage stabilising tube V_6, Type 85A2, performs two functions. In the first place it permits the use of charge capacitors of low working voltage rating, and secondly it assists in improving the linearity of the timebase.

The operation of changing over from "time base" to "horizontal amplifier" can be followed from the simplified version of the circuit of valve V_5 shown in Fig. 99 which indicates the connections made in the two positions of switch S_1 which represents switch S_6 in the complete circuit diagram of Fig. 98. In the following explanation the references printed in brackets indicate the corresponding components in the complete circuit diagram.

In the left-hand diagram, Fig. 99*a*, the connections as time base generator are shown. The left-hand triode section of V_5 is connected as a blocking oscillator, the frequency of which is adjusted by means if R_4 (R_{64}) and by changing the value of C_1 (achieved by switch S_4 in the complete circuit). The right-hand triode section is connected as a cathode follower, its cathode load bein $R_1 + R_2$ ($R_{56} + R_{57}$). Its output voltage is applied via R_5 and R_2 (R_{74} and R_{57}) to the attenuator P (R_{75}) and thence, via S_1 (S_5) to the output stage (V_4). It should be noted that in this position of S_1 the load in the anode circuit of the right-hand triode (R_{55} and L_2) is short-circuited.

When switch S_1 (S_6) is moved to the "amplifier" position, the connections become as in Fig. 99(b). The short circuit is removed from the anode load of the right-hand triode and its cathode and the upper terminal of R_1 (R_{56}) are earthed. This triode therefore acts as a normal amplifier and its output voltage is applied to the output stage (V_4).

3.4. VERTICAL AMPLIFIER

The following description of the vertical amplifier applies also to the horizontal amplifier with, of course, the necessary changes in the reference numbers of the various components. Valves V_1 and V_2 constitute the vertical amplifier, the left-hand section of V_1 being connected as a cathode follower and the right-hand section as a voltage amplifier. V_2 is the push-pull output stage.

Inputs up to 60 V_{rms} may be applied between terminals T_2 and T_3 or inputs up to 300 V_{rms} between terminals T_1 and T_3. S_1 is an attenuator for step control of the input, and R_{12} the fine amplitude control. Switch S_2 connects the vertical deflection plates of the cathode ray tube either direct to the two

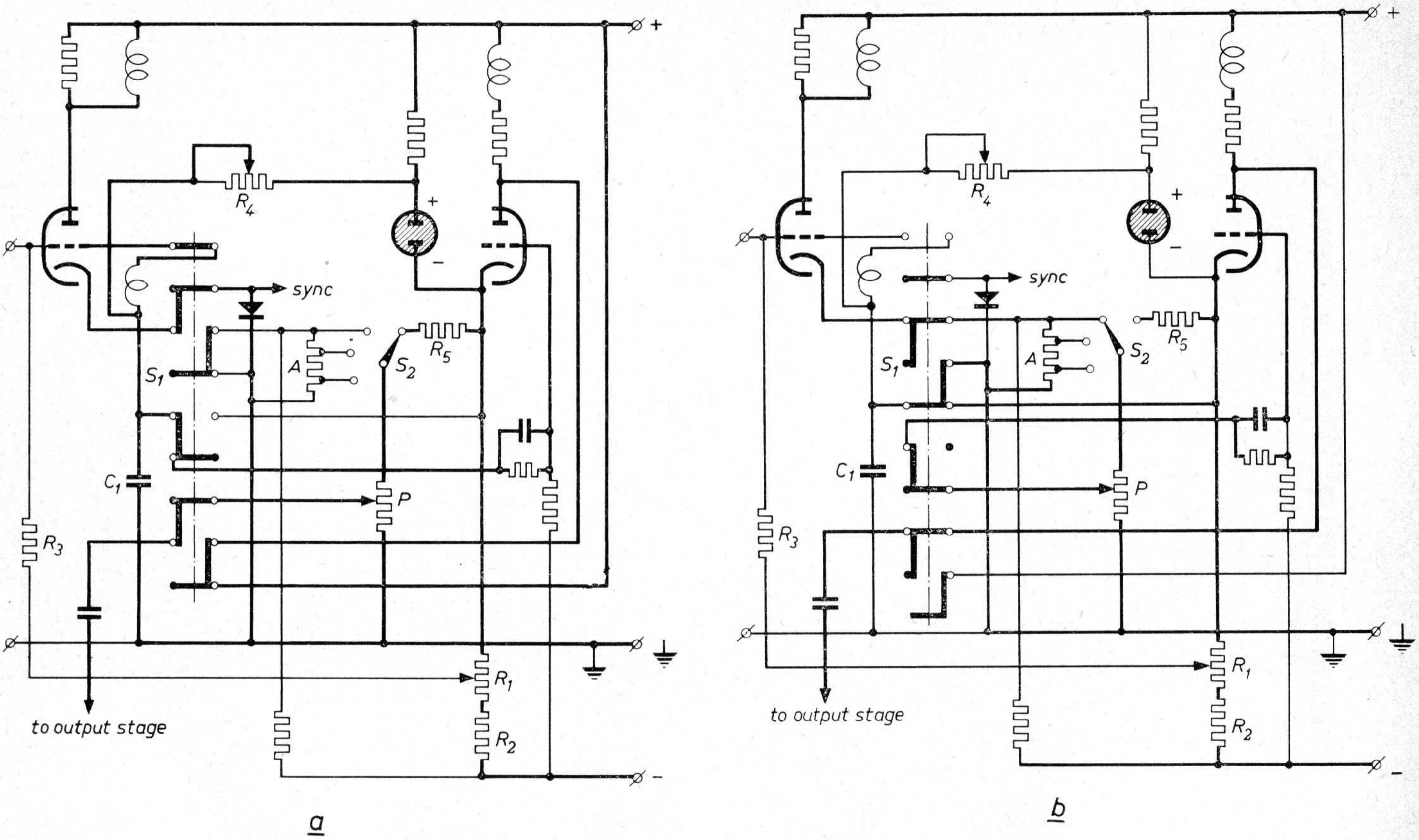

Fig. 99. Circuit for switching the first tube of the horizontal amplifier as a timebase oscillator (a) *or as an amplifier* (b)

anodes of the output stage or, via capacitors C_7 and C_9, to terminals T_4 and T_5, thus providing direct input to the deflecting system.

R_{40} is the brightness control, and external beam modulation can be applied via terminal T_6, a voltage of between 0.5 and 3 V being required.

3.5. POWER SUPPLY

Since selenium rectifiers are used throughout, only a simple and inexpensive mains transformer is required, having one secondary winding for the H.T. and E.H.T. supply and two heater windings, one for the valves and one for the cathode ray tube. The H.T. secondary supplies a direct current at +360 V after rectification, and a further supply at —360 V is obtained by voltage doubling. It is recommended that the mains switch, S_8, be combined with the focusing control R_{35}.

COMPONENTS LIST

CAPACITORS

C_1	0·1μF	paper	400V D.C.
C_2 C_3	32 + 32μF	electrolytic	450V D.C.
C_4	0·1μF	paper	1000V D.C.
C_5	8μF	electrolytic	500V D.C.
C_6	2μF	paper	600V D.C.
C_7	0·25μF	paper	250V D.C.
C_8	8μF	electrolytic	500V D.C.
C_9	0·1μF	paper	350V D.C.
C_{10}	0·1μF	paper	300 VD.C.
C_{11}	0·25μF	paper	400V D.C.
C_{12}	0·1μF	paper	500V D.C.
C_{13}	6800pF	5% silver mica	
C_{14}	680pF	5% silver mica	
C_{15}	68pF	5% silver mica	
C_{16}	0·1μF	paper	500V D.C.
C_{17}	8·2pF	10% silver mica	
C_{18}	0·02μF	paper	
C_{19}	1800pF	5% silver mica	
C_{20}	180pF	5% silver mica	
C_{21}	8μF	electrolytic	450V D.C.
C_{22}	47pF	10% silver mica	

RESISTORS

R_1	10 Ω		6W (w.w.)	R_{16}	50kΩ Lin. Pot./10%			R_{32}	220kΩ		1W
R_2	Values to be calculated as indicated on page 103		6W (w.w.)	R_{17}	82kΩ		1W	R_{33}	2MΩ Lin. Pot./10%		
				R_{18}	100kΩ	10%	1W	R_{34}	2MΩ Log. Pot./10%		
R_3			6W (w.w.)	R_{19}	390kΩ	10%	1W	R_{35}	500kΩ		1W
R_4	1kΩ		1W	R_{20}	1·2kΩ *	5%	1W	R_{36}	27kΩ	10%	1W
R_5	220kΩ		1W	R_{21}	100kΩ		½W	R_{37}	250kΩ Lin. Pot./10%		
R_6	680kΩ *	5%	½W	R_{22}	180kΩ	10%	½W	R_{38}	1MΩ		½W
R_7	1MΩ *	5%	½W	R_{23}	180kΩ	10%	½W	R_{39}	180 Ω		1W
R_8	100kΩ *	5%	½W	R_{24}	68kΩ	10%	1W	R_{40}	68kΩ		1W
R_9	10kΩ *	5%	½W	R_{25}	330kΩ	10%	1W	R_{41}	56kΩ		6W (w.w.)
R_{10}	1kΩ *	5%	½W	R_{26}	120kΩ	10%	1W	R_{42}	1MΩ		½W
R_{11}	110 Ω *	5%	½W	R_{27}	250kΩ Lin. Pot./10%			R_{43}	22kΩ		1W
R_{12}	82kΩ		1W	R_{28}	22kΩ	10%	½W	R_{44}	82kΩ		1W
R_{13}	100kΩ Lin. Pot./10%			R_{29}	68kΩ *	5%	½W	R_{45}	270kΩ		1W
R_{14}	22kΩ		1W	R_{30}	330kΩ	10%	1W	R_{46}	22kΩ		1W
R_{15}	47kΩ		1W	R_{31}	250kΩ Lin. Pot./10%						

*High Stability Resistors. (w.w.) Denotes wirewound. Tolerance ±20% except where stated.

Resistors R_7, R_8, R_9, R_{10} may be replaced by single 1MΩ logarithmic potentiometer if so required.

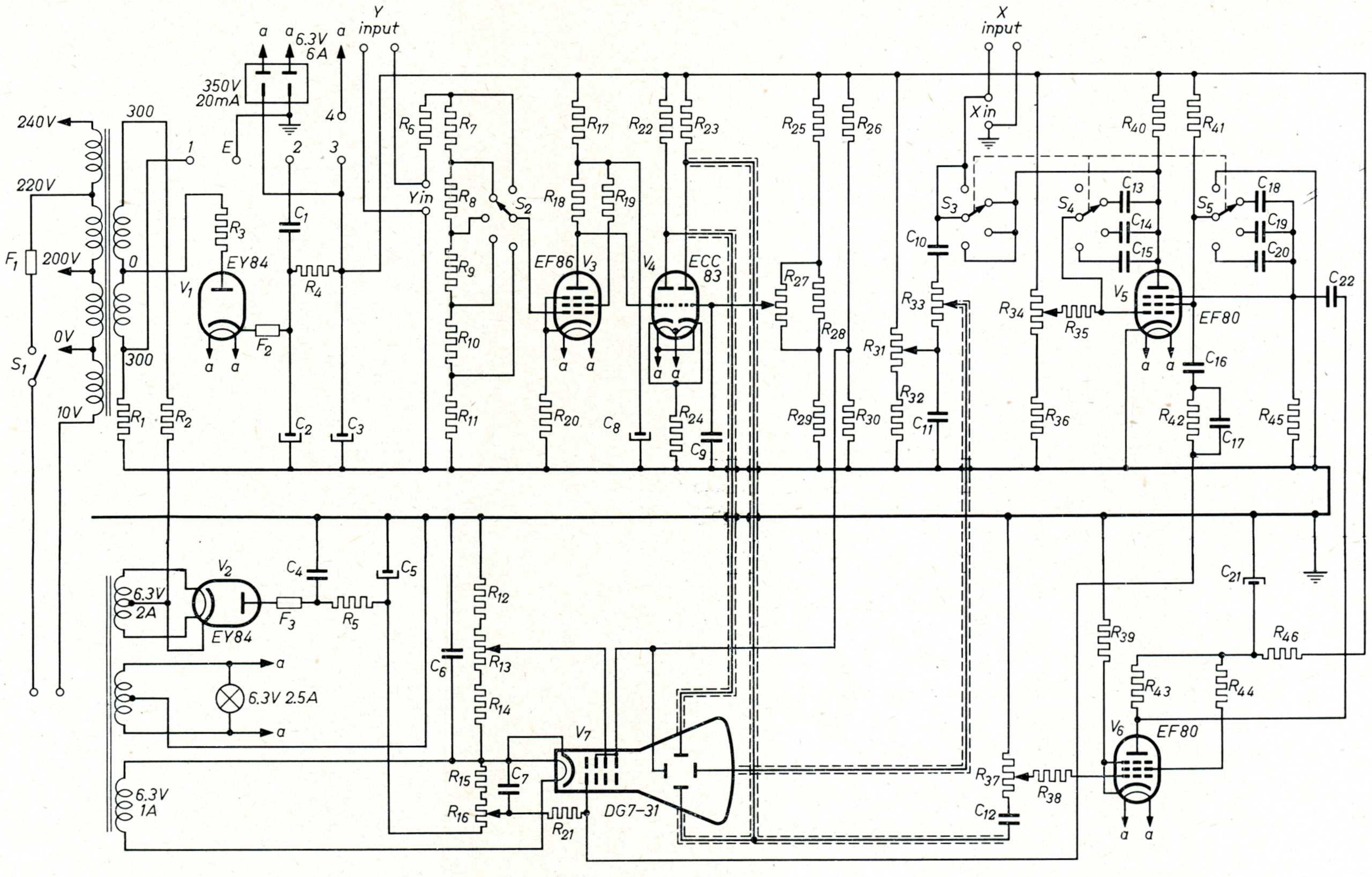

Fig. 85. Main circuit diagram of Students' Oscilloscope

COMPONENTS LIST

CAPACITORS

C_1	Electrolytic	32	µF	350V
C_2	Electrolytic	16	µF	350V
C_3	Electrolytic	25+25	µF	300V
C_4	Electrolytic	25+25	µF	300V
C_5	Electrolytic	16	µF	350V
C_6*	Trimmer	o·3 to 3	pF	500V
C_7	Paper	0·1	µF	500V
C_8	Electrolytic	25	µF	50V
C_9	Ceramic	220	pF	350V
C_{10}	Paper	0·1	µF	350V
C_{11}	Ceramic	220	pF	350V
C_{12}	Paper	0·05	µF	350V
C_{13}	Paper	0·25	µF	350V
C_{14}	Paper	0·25	µF	350V
C_{15}	Silver-Mica	1800	pF	350V
C_{16}	Paper	0·01	µF	350V
C_{17}	Paper	0·05	µF	350V
C_{18}	Paper	0·01	µF	350V
C_{19}	Silver-Mica	2200	pF	350V
C_{20}	Silver-Mica	560	pF	350V
C_{21}	Silver-Mica	150	pF	350V
C_{22}	Paper	0·1	µF	350V
C_{23}	Paper	0·1	µF	350V
C_{24}	Paper	0·02	µF	350V
C_{25}	Paper	0·005	µF	350V
C_{26}	Silver-Mica	1200	pF	350V
C_{27}	Silver-Mica	300	pF	350V
C_{28}	Ceramic	33	pF	350V
C_{29}	Paper	0·05	µF	350V
C_{30}	Ceramic	33	pF	350V
C_{31}	Paper	0·25	µF	350V
C_{32}	Paper	0·25	µF	350V
C_{33}§	Paper	0·1	µF	350V
C_{34}§	Electrolytic	100	µF	6V
C_{35}§	Paper	0·1	µF	350V

* Used in High-impedance Attenuator Probe.

§ Used in High-gain Pre-amplifier Probe.

RESISTORS

R_1	150 kΩ	1W
R_2	22 kΩ	¼W
R_3	50 kΩ	1W linear
R_4	100 kΩ	1W linear
R_5	270 kΩ	¼W
R_6	2·2kΩ	¼W
R_7	2·2kΩ	¼W
R_8	2× 8·2kΩ	2× 2W in parallel
R_9	8·2kΩ	2W
R_{10}	100 kΩ	½
R_{11}*	10 MΩ	¼W
R_{12}	1.2MΩ	¼W
R_{13}	1·0MΩ	¼W
R_{14}	330 Ω	¼W
R_{15}	10 kΩ	¼W
R_{16}	10 kΩ	1W linear
R_{17}	220 Ω	¼W
R_{18}	5·6kΩ	½W
R_{19}	1 MΩ	¼W
R_{20}	270 Ω	¼W
R_{21}	5·6kΩ	½W
R_{22}	10 MΩ	¼W
R_{23}	10 kΩ	½W
R_{24}	10 kΩ	½W
R_{25}	4.7MΩ	¼W
R_{25}a†	3·9MΩ	¼W
R_{26}	4·7MΩ	¼W
R_{26}a†	3·9MΩ	¼W
R_{27}	10 kΩ	¼W
R_{28}	390 Ω	¼W
R_{29}	470 Ω	¼W
R_{30}	47 Ω	¼W
R_{31}	2× 10 Ω	2× ¼W in parallel
R_{32}	1 MΩ	¼W
R_{33}	82 kΩ	¼W
R_{33}a	10 kΩ	¼W
R_{34}	100 kΩ	¼W
R_{35}	27 kΩ	½W
R_{36}	10 kΩ	¼W
R_{37}	10 kΩ	¼W
R_{38}	4·7kΩ	¼W
R_{39}	25 kΩ	1W linear
R_{40}	2 MΩ	1W linear
R_{41}	390 kΩ	¼W
R_{42}	1 MΩ	¼W
R_{43}	10 MΩ	¼W
R_{44}	1·2MΩ	¼W
R_{45}	4.7MΩ	¼W
R_{45}a†	3·9MΩ	¼W
R_{46}	4·7MΩ	¼W
R_{46}a†	3·9MΩ	¼W
R_{47}	100 kΩ	¼W
R_{48}	2× 2 MΩ	two-gang, linear
R_{49}†	2× 2 MΩ	two-gang, linear
R_{50}§	470 kΩ	¼W
R_{51}§	47 kΩ	¼W
R_{52}§	470 kΩ	¼W
R_{53}§	1·5kΩ	¼W
R_{54}§	120 kΩ	¼W
R_{55}§	470 kΩ	¼W

* Used in High-impedance Attenuator Probe.

§ Used in High-gain Pre-amplifier Probe.

† Used in Shift Control Circuit (see Fig. 94).

Note. All potentiometers are ± 20% tolerance.

All other resistors are ± 10% tolerance.

VALVES & TUBES

C.R.T.	..	DG7-32, with mumetal shield
V_1 ..	..	EZ80
V_2, V_3	..	2× ECF80
V_4 ..	..	ECC81
V_5 ..	..	EF80 (lead from anode to RV39 must be screened)
D_1, D_2	..	2× OA81
MR_1	..	Any suitable metal rectifier

An EF86 is used in the high-gain probe.

OTHER COMPONENTS

T_1 Mains Transformer.

Primary 10-0-200-220-240V.
Secondary 250-0-250V. 40mA.
6·3V. 2A.
6·3V. 1A.

FS_1 Fuse 1A.
S_1 Mains switch
S_2 a/b 2-pole, 5-way switch.
S_3 Double-pole change-over switch (for high-gain probe).
Cathode ray tube shield.
10 panel sockets
10 plugs to match.
6 B9A valveholders.
1 B12A valveholder.
1 B9A plug (for high gain probe).
1 Cathode ray tube mask.

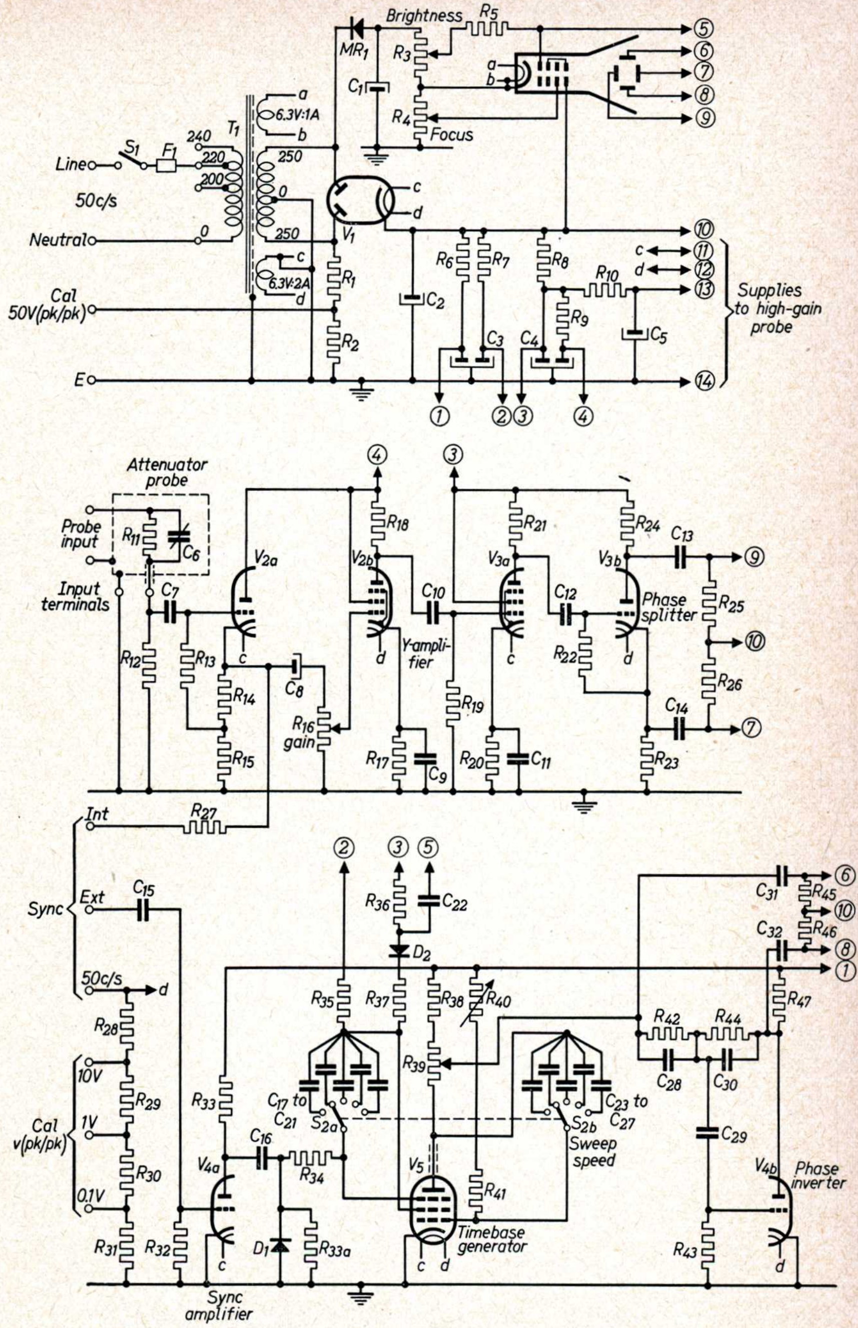

Fig. 92. Main Circuit of Service Oscilloscope

COMPONENTS LIST

RESISTORS

R_1 = 8.2 MΩ, 1W
R_2 = 2·2 MΩ, $\frac{1}{2}$W
R_3 = 270 kΩ, 1W
R_4 = 10 kΩ, $\frac{1}{4}$W
R_5 = 33 kΩ, $\frac{1}{4}$W
R_6 = 82 kΩ, $\frac{1}{4}$W
R_7 = 27 kΩ, $\frac{1}{4}$W
R_8 = 1·5 kΩ, $\frac{1}{4}$W
R_9 = 390 Ω, $\frac{1}{4}$W
R_{10} = 100 Ω, $\frac{1}{4}$W
R_{11} = 47 Ω, $\frac{1}{4}$W
R_{12} = 5 kΩ, linear, wire-round
R_{13} = 1 MΩ, $\frac{1}{2}$W
R_{14} = 100 MΩ, 1W
R_{15} = 27 kΩ, $\frac{1}{2}$W
R_{16} = 4·7 kΩ, $\frac{1}{2}$W
R_{17} = 1 kΩ, linear, carbon
R_{18} = 3.3 kΩ, $\frac{1}{2}$W
R_{19} = 220 kΩ, 1W
R_{20} = 220 kΩ, 1W
R_{21} = 1 MΩ, $\frac{1}{2}$W
R_{22} = 27 kΩ, 1W
R_{23} = 47 kΩ, 7W, wire-wound
R_{24} = 27 kΩ, 1W
R_{25} = 12 kΩ, 1W
R_{26} = 1 MΩ, $\frac{1}{2}$W
R_{27} = 12 kΩ, $\frac{1}{2}$W
R_{28} = 3·3 MΩ, 1W
R_{29} = 3·3 MΩ, 1W
R_{30} = 39 kΩ, 1W
R_{31} = 100 kΩ, linear, carbon
R_{32} = 1·5 MΩ, 1W
R_{33} = 100 kΩ, linear, carbon
R_{34} = 270 kΩ, 1W
R_{35} = 100 kΩ, linear, carbon
R_{36} = 82 kΩ, 1W
R_{37} = 10 kΩ, $\frac{1}{4}$W
R_{38} = 220 kΩ, $\frac{1}{2}$W
R_{39} = 220 kΩ, $\frac{1}{2}$W
R_{40} = 20 kΩ, linear, carbon
R_{41} = 2·7 kΩ, 3W
R_{42} = 1 MΩ, $\frac{1}{2}$W
R_{43} = 1 MΩ, $\frac{1}{2}$W
R_{44} = 3·3 MΩ, 1W
R_{45} = 1 MΩ, $\frac{1}{2}$W
R_{46} = 3·3 MΩ, $\frac{1}{2}$W
R_{47} = 82 kΩ, $\frac{1}{2}$W
R_{48} = 27 kΩ, 1W
R_{49} = 12 kΩ, 1W
R_{50} = 47 kΩ, 7W, wire-wound
R_{51} = 27 kΩ, 1W
R_{52} = 1 MΩ, $\frac{1}{2}$W
R_{53} = 2·2 kΩ, $\frac{1}{2}$W
R_{54} = 100 MΩ, 1W
R_{55} = 27 kΩ, $\frac{1}{2}$W
R_{56} = 1 kΩ, linear, carbon
R_{57} = 56 kΩ, 3W
R_{58} = 5.6 kΩ, 1W
R_{59} = 5·6 kΩ, 1W
R_{60} = 1 MΩ, $\frac{1}{2}$W
R_{61} = 270 kΩ, 1W
R_{62} = 68 kΩ, $\frac{1}{2}$W
R_{63} = 560 kΩ, 1W
R_{64} = 1 MΩ, anti-log., carbon
R_{65} = 330 kΩ, 1W
R_{66} = 10 kΩ, $\frac{1}{4}$W
R_{67} = 33 kΩ, $\frac{1}{4}$W
R_{68} = 82 kΩ, $\frac{1}{4}$W
R_{69} = 27 kΩ, $\frac{1}{4}$W
R_{70} = 1·5 kΩ, $\frac{1}{4}$W
R_{71} = 390 Ω, $\frac{1}{4}$W
R_{72} = 100 Ω, $\frac{1}{4}$W
R_{73} = 47 Ω, $\frac{1}{4}$W
R_{74} = 5·6 kΩ, $\frac{1}{2}$W
R_{75} = 5 kΩ, linear ,carbon
R_{76} = 2·2 kΩ, $\frac{1}{2}$W
R_{77} = 2·7 kΩ, $\frac{1}{2}$W
R_{78} = 1·5 kΩ, $\frac{1}{2}$W
R_{79} = 2·2 kΩ, 1W
R_{80} = 270 kΩ, 1W
R_{81} = 2·2 MΩ, $\frac{1}{2}$W
R_{82} = 820 Ω, $\frac{1}{2}$W
R_{83} = 3·3 kΩ, $\frac{1}{2}$W
R_{84} = 560 Ω, 1W
R_{85} = 8·2 MΩ, 1W

CAPACITORS

C_1 = 5 pF, max., trimmer
C_2 = 0·25μF, 500V
C_3 = 0·047μF, 300V
C_4 = 0·5 μF, 500V
C_5 = 100 μF, 12·5V
C_6 = 0·5 μF, 500V
C_7 = 0·25μF, 500V
C_8 = 0·25μF, 500V
C_9 = 0·25μF, 500V
C_{10} = 0·25μF, 500V
C_{11} = 0·25μF, 500V
C_{12} = 0·25μF, 500V
C_{13} = 0·25μF, 500V
C_{14} = 0·5 μF, 500V
C_{15} = 270 pF, 300V
C_{16} = 0·5 μF, 500V
C_{17} = 2× 50 μF, 400V
C_{18} = 0·047μF, 300V
C_{19} = 47 pF, 300V
C_{20} = 180 pF, 300V
C_{21} = 820 pF, 300V
C_{22} = 3300 pF, 300V
C_{23} = 0·01μF, 300V
C_{24} = 0·033μF, 300V
C_{25} = 0·1 μF, 300V
C_{26} = 0·33μF, 330V
C_{27} = 1 μF, 300V
C_{28} = 50 μF, 450V
C_{29} = 50 μF, 450V
C_{30} = 1000 pF, 500V
C_{31} = 2× 50 μF, 450V
C_{32} = 0·25μF, 500V
C_{33} = 5 pF max., trimmer

OTHER COMPONENTS

L_1 = approx. 15 mH
L_2 = approx. 15 mH
V_1 = ECC83
V_2 = ECC81
V_3 = DG7-32
V_4 = ECC81
V_5 = ECC83
V_6 = 85A2
N = neon lamp Z10
F_1 = 1 A fuse
F_2 = 0·1 A fuse
G = germanium diode OA 55
Sel_1 = selenium rectifier 2× 220C85 in series
Sel_2 = selenium rectifier 2× 220C85 in series
$Tr_1 : w_1$ = approx. 120 μH,
$w_1 : w_2$ = 2·5 : 1
$Tr_2 : w_1$ = 110, 130, 145, 190, 220, 245 V
w_2 = 350 V. 40 mA
w_3 = 6·3 V, 1·2 A
w_4 = 6·3 V, 0·4 A

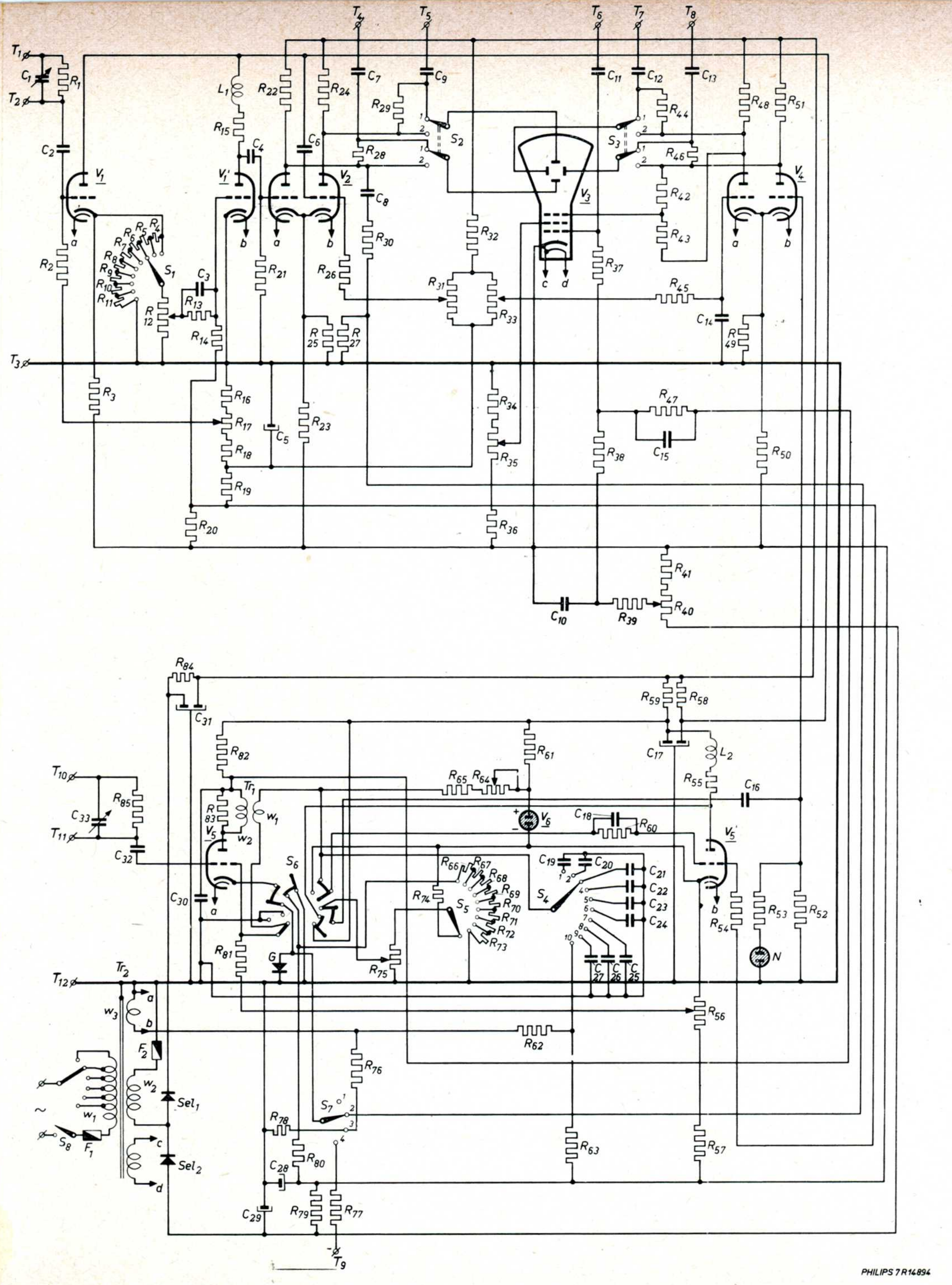

Fig. 98. A versatile oscilloscope incorporating cathode ray tube DG 7—32