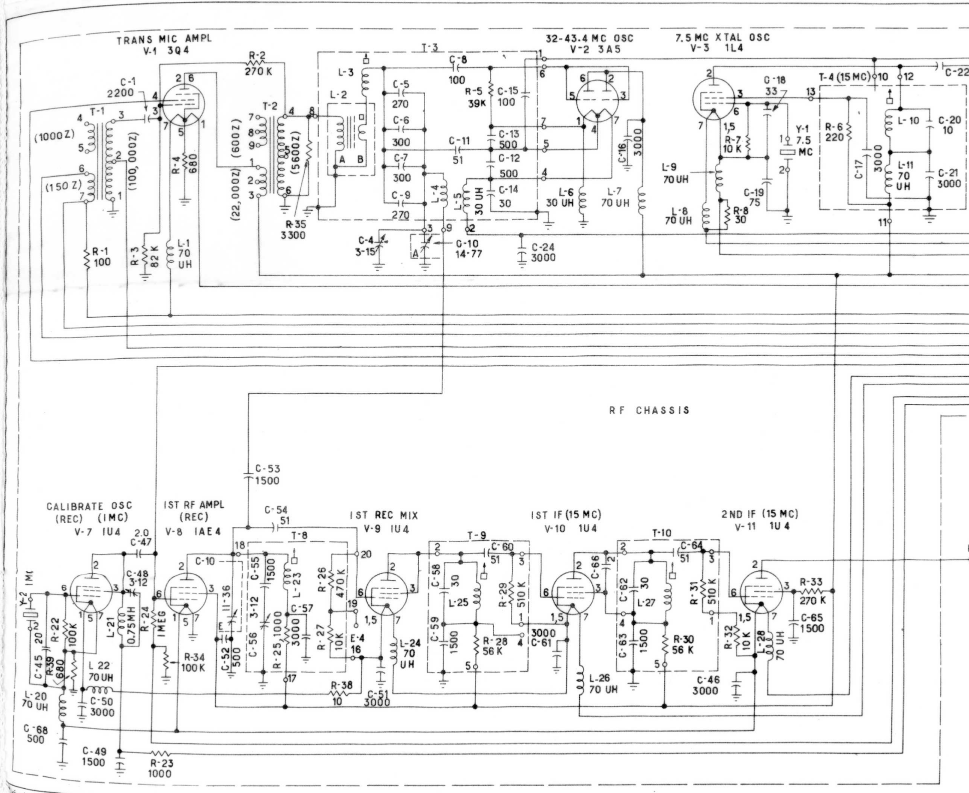
TRANS MIC AMPL
V-1 3Q4
32-43.4 MC OSC
V-2 3A5
7.5 MC XTAL OSC
V-3 1L4
T-1
(1000 Z)
(150 Z)
(100,000 Z)
C-1
2200
R-1
100
R-2
270 K
R-3
82 K
R-4
680
L-1
70
UH
T-2
(600 Z)
(22,000 Z)
(5600 Z)
R-35
3300
T-3
L-3
L-2
A B
C-5
270
C-6
300
C-7
300
C-9
270
C-8
100
R-5
39K
C-15
100
C-11
51
C-13
500
C-12
500
C-14
30
L-4
L-5
30 UH
C-4
3-15
C-10
14-77
C-24
3000
L-6
30 UH
L-7
70 UH
C-16
3000
C-18
33
Y-1
7.5
MC
R-7
10 K
R-6
220
C-19
75
L-9
70 UH
L-8
70 UH
R-8
30
T-4 (15 MC)
C-22
C-17
3000
L-10
C-20
10
L-11
70
UH
C-21
3000
RF CHASSIS
C-53
1500
C-54
51
CALIBRATE OSC
(REC) (1MC)
V-7 1U4
IST RF AMPL
(REC)
V-8 1AE4
IST REC MIX
V-9 1U4
IST IF (15 MC)
V-10 1U4
2ND IF (15 MC)
V-11 1U 4
2.0
C-47
Y-2 1MC
C-45 20
R-22
100 K
R39
680
C-48
3-12
L-21
0.75MH
L 22
70 UH
L-20
70 UH
C-50
3000
C-68
500
C-49
1500
R-23
1000
R-24
1MEG
R-34
100 K
C-10
E
11-36
C-52
500
T-8
C-55
1500
C-56
3-12
R-25
1000
L-23
C-57
3000
R-26
470 K
R-27
10K
E-4
R-38
10
L-24
70
UH
C-51
3000
T-9
C-58
30
L-25
C-59
1500
C-60
51
R-29
510 K
R-28
56 K
3000
C-61
L-26
70 UH
C-66
2
T-10
C-62
30
L-27
C-63
1500
C-64
51
R-31
510 K
R-30
56 K
C-46
3000
R-32
10 K
L-28
70 UH
R-33
270 K
C-65
1500

ési-Color Paris-B.S.G.D.G. 1439-57 Printed in France

RECEIVER TRANSMITTER RT 70 A/GRC SCHEMATIC DIAGRAM

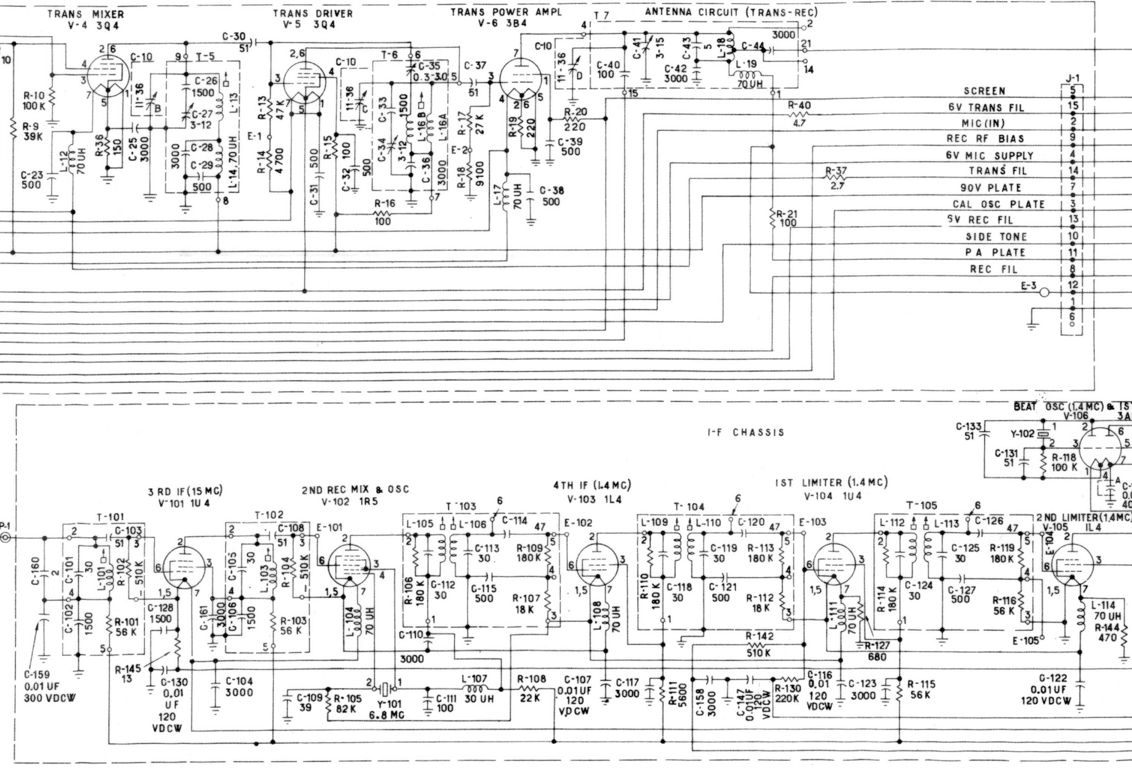
TRANS MIXER
V-4 3Q4
TRANS DRIVER
V-5 3Q4
TRANS POWER AMPL
V-6 3B4
T 7
ANTENNA CIRCUIT (TRANS-REC)
R-10
100 K
R-9
39K
L-12
70 UH
C-23
500
R-36
150
C-25
3000
C-10
11-36
B
T-5
C-26
1500
C-27
3-12
L-13
C-28
C-29
3000
500
L-14, 70 UH
C-30
51
R-13
47 K
E-1
R-14
4700
C-31
500
R-15
100
C-32
500
R-16
100
T-6
C-35
0.3-3.0
C-33
1500
C-34
3-12
L-16 B
L-16A
C-36
3000
C-37
51
R-17
27 K
E-2
R-18
9100
R-19
220
R-20
220
C-39
500
L-17
70 UH
C-38
500
C-10
11-36
D
C-40
100
C-41
3-15
C-43
5
C-42
3000
L-18
C-44
3000
L-19
70 UH
R-40
4.7
R-37
2.7
R-21
100
J-1
SCREEN
6V TRANS FIL
MIC (IN)
REC RF BIAS
6V MIC SUPPLY
TRANS FIL
90V PLATE
CAL OSC PLATE
5V REC FIL
SIDE TONE
P A PLATE
REC FIL
E-3
I-F CHASSIS
BEAT OSC (1.4 MC) & 1ST
V-106
3A
C-133
51
Y-102
C-131
51
R-118
100 K
3 RD IF (15 MC)
V-101 1U4
2ND REC MIX & OSC
V-102 1R5
4TH IF (1.4 MC)
V-103 1L4
1ST LIMITER (1.4 MC)
V-104 1U4
2ND LIMITER (1.4 MC)
V-105 1L4
P-1
T-101
C-103
51
C-160
2
C-101
30
L-101
R-102
510 K
C-102
1500
R-101
56 K
C-159
0.01 UF
300 VDCW
R-145
13
C-128
1500
C-130
0.01
UF
120
VDCW
C-161
3000
C-104
3000
T-102
C-108
51
C-105
30
C-106
1500
L-103
R-104
510 K
R-103
56 K
E-101
L-104
70 UH
C-109
39
R-105
82 K
Y-101
6.8 MC
C-111
100
L-107
30 UH
R-108
22 K
C-107
0.01 UF
120
VDCW
T-103
L-105
L-106
C-114
47
R-106
180 K
C-112
30
C-113
30
C-115
500
R-109
180 K
R-107
18 K
C-110
3000
E-102
L-108
70 UH
C-117
3000
R-111
5600
T-104
L-109
L-110
C-120
47
R-110
180 K
C-118
30
C-119
30
C-121
500
R-113
180 K
R-112
18 K
R-142
510 K
C-158
3000
C-147
0.01 UF
120
VDCW
R-130
220 K
C-116
0.01
120
VDCW
E-103
L-111
70 UH
R-127
680
C-123
3000
R-115
56 K
T-105
L-112
L-113
C-126
47
R-114
180 K
C-124
30
C-125
30
C-127
500
R-119
180 K
R-116
56 K
E-105
E-104
L-114
70 UH
R-144
470
C-122
0.01 UF
120 VDCW

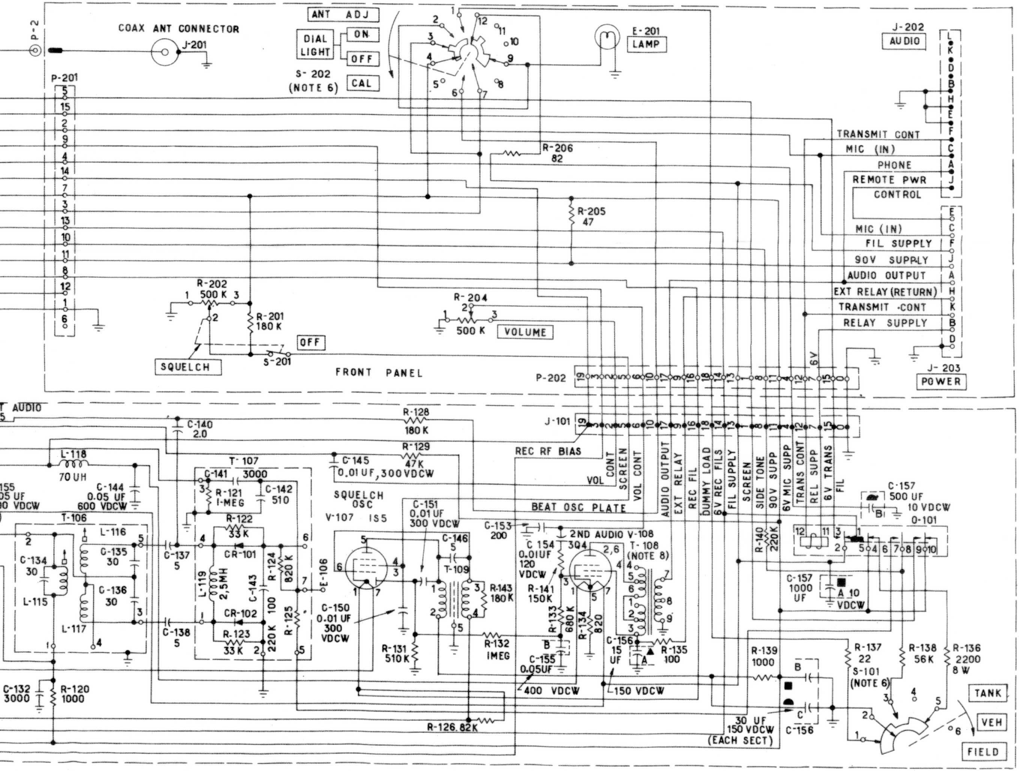
P-2
COAX ANT CONNECTOR
J-201
P-201
ANT ADJ
DIAL LIGHT
ON
OFF
CAL
S-202 (NOTE 6)
E-201
LAMP
J-202
AUDIO
TRANSMIT CONT
MIC (IN)
PHONE
REMOTE PWR CONTROL
R-206 82
R-205 47
FIL SUPPLY
90V SUPPLY
AUDIO OUTPUT
EXT RELAY (RETURN)
TRANSMIT CONT
RELAY SUPPLY
J-203
POWER
R-202 500 K
R-201 180 K
SQUELCH
OFF
S-201
R-204
500 K
VOLUME
FRONT PANEL
P-202
6V
J-101
T AUDIO
C-140 2.0
R-128 180 K
R-129 47 K
REC RF BIAS
VOL CONT
SCREEN
VOL CONT
AUDIO OUTPUT
EXT RELAY
REC FIL
DUMMY LOAD
6V REC FILS
FIL SUPPLY
SCREEN
SIDE TONE
90V SUPP
6V MIC SUPP
TRANS CONT
REL SUPP
6V TRANS
FIL
L-118 70 UH
C-144 0.05 UF 600 VDCW
155 05 UF 30 VDCW
T-107
C-141 3000
R-121 1-MEG
C-142 510
C-145 0.01 UF, 300 VDCW
SQUELCH OSC
V-107 1S5
C-151 0.01 UF 300 VDCW
BEAT OSC PLATE
C-153 200
C-154 0.01 UF 120 VDCW
2ND AUDIO V-108 3Q4
T-108 (NOTE 8)
C-157 500 UF 10 VDCW
O-101
R-140 220 K
T-106
L-116
C-135 30
C-136 30
C-134 30
L-115
L-117
C-137 5
C-138 5
R-122 33 K
CR-101
CR-102
L-119 2,5MH
C-143 100
R-124 820 K
R-123 33 K
220 K
R-125
E-106
C-146 5
T-109
R-143 180 K
C-150 0.01 UF 300 VDCW
R-131 510 K
R-132 1MEG
R-141 150 K
R-133 680 K
R-134 820
C-155 0.05 UF
400 VDCW
C-156 15 UF
150 VDCW
R-135 100
C-157 1000 UF 10 VDCW
R-139 1000
R-137 22
R-138 56 K
R-136 2200 8 W
S-101 (NOTE 6)
TANK
VEH
FIELD
30 UF 150 VDCW (EACH SECT)
C-156
C-132 3000
R-120 1000
R-126 82 K

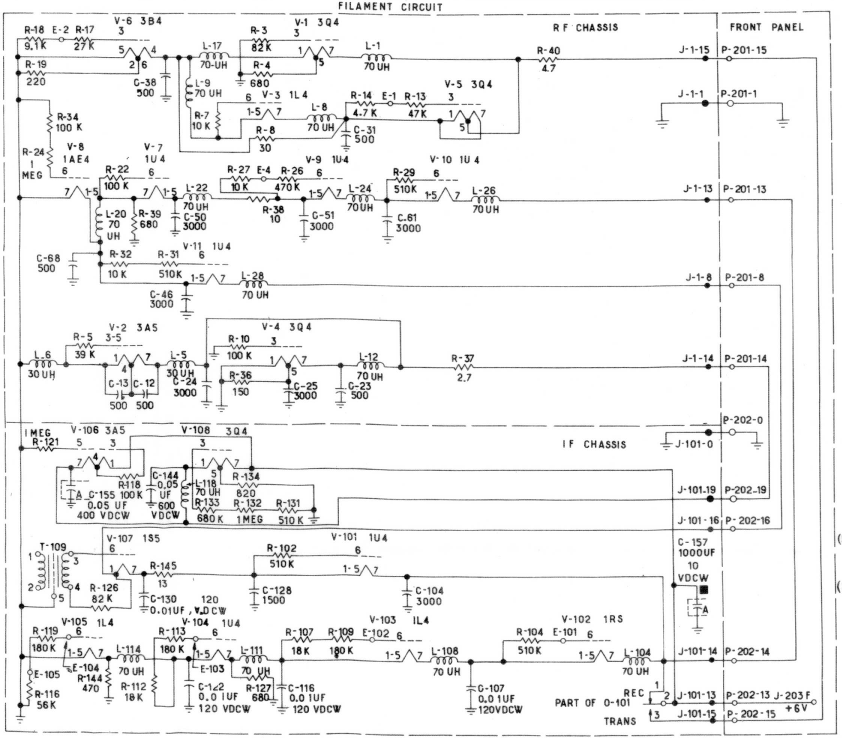
FILAMENT CIRCUIT
RF CHASSIS
FRONT PANEL
R-18 9.1K
E-2
R-17 27K
V-6 3B4
R-19 220
C-38 500
L-17 70-UH
L-9 70 UH
R-3 82K
V-1 3Q4
R-4 680
L-1 70 UH
R-40 4.7
J-1-15
P-201-15
V-5 3Q4
V-3 1L4
R-14 4.7K
E-1
R-13 47K
L-8 70 UH
C-31 500
R-7 10K
R-8 30
J-1-1
P-201-1
R-34 100K
R-24 1 MEG
V-8 1AE4
V-7 1U4
R-22 100K
L-22 70 UH
C-50 3000
R-27 10K
E-4
R-26 470K
V-9 1U4
R-38 10
C-51 3000
L-24 70UH
R-29 510K
V-10 1U4
C-61 3000
L-26 70UH
J-1-13
P-201-13
L-20 70 UH
R-39 680
C-68 500
R-32 10K
R-31 510K
V-11 1U4
C-46 3000
L-28 70 UH
J-1-8
P-201-8
V-2 3A5
R-5 39K
L-6 30 UH
C-13 500
C-12 500
L-5 30 UH
C-24 3000
V-4 3Q4
R-10 100K
R-36 150
C-25 3000
L-12 70 UH
C-23 500
R-37 2.7
J-1-14
P-201-14
P-202-0
J-101-0
IF CHASSIS
1MEG R-121
V-106 3A5
V-108 3Q4
R118 100K
C-155 0.05 UF 400 VDCW
C-144 0.05 UF 600 VDCW
L-118 70 UH
R-134 820
R-133 680K
R-132 1MEG
R-131 510K
J-101-19
P-202-19
J-101-16
P-202-16
T-109
V-107 1S5
R-145 13
R-126 82K
C-130 0.01UF, 120 V.DCW
R-102 510K
V-101 1U4
C-128 1500
C-104 3000
C-157 1000UF 10 VDCW
V-105 1L4
R-119 180K
E-104
R-144 470
E-105
R-116 56K
L-114 70 UH
R-112 18K
V-104 1U4
R-113 180K
E-103
L-111 70 UH
C-122 0.01UF 120 VDCW
R-127 680
C-116 0.01UF 120 VDCW
V-103 1L4
R-107 18K
R-109 180K
E-102
L-108 70 UH
C-107 0.01UF 120VDCW
V-102 1RS
R-104 510K
E-101
L-104 70 UH
J-101-14
P-202-14
REC
PART OF 0-101
TRANS
J-101-13
P-202-13
J-203 F
+6V
J-101-15
P-202-15

NOTES

1 - RESISTOR VALUES IN OHMS, CAPACITOR VALUES IN MICRO-MICROFARADS UNLESS OTHERWISE SHOWN

2 - ALL RESISTORS ARE 1/2 WATT UNLESS OTHERWISE SHOWN

3 - ALL CAPACITORS HAVE 500 VDCW UNLESS OTHERWISE SHOWN.

4 - E-1 TO E-4, E-101 TO E-106 ARE TEST POINTS

5 - TERMINAL ARRANGEMENT OF J-1, P-201, J-101, P-202, J-202 & J-203 SHOWN FROM WIRING SIDE

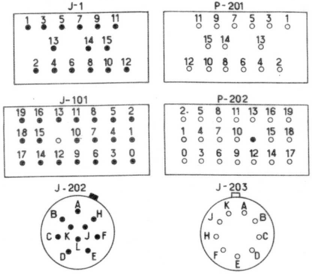
J-1
P-201
J-101
P-202
J-202
J-203

6 - ALL WAFER SWITCHES SHOWN FROM WIRING SIDE S-202 SHOWN IN ANT ADJ POSITION S-101 SHOWN IN TANK POSITION

7 - CONDENSER C-10 IS COMPOSED OF GANGED SECTIONS C-10 A THRU C-10 E

8 - TRANSFORMER IMPEDANCE FOR T-108

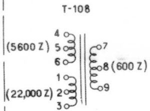
T-108
(5600 Z)
8 (600 Z)
(22,000 Z)

9 - TERMINAL BOARD COMPONENT LOCATION

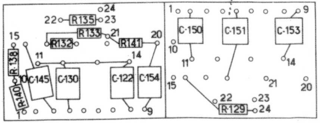
R135
R133
R132
R141
R138
R140
C145
C130
C122
C154
C150
C151
C153
R129